Smart Inverter Installation Quick Start v2.0 22Feb2023

Danger. Lethal voltage. Observe all safety warnings listed in installation manual. Read this document in conjunction with the Smart Inverter Installation Manual.

First time installer? Start here: **redback.link\siim** Single Line Diagram: **redback.link\sisld**

1 Know your product

SI5000 & SI6000

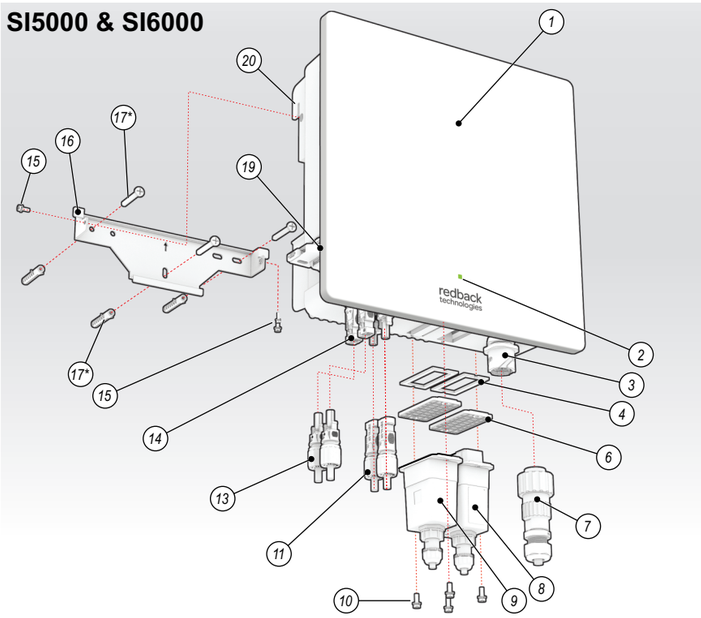

#	Part name						
1	Inverter assembly	6	Comm's port covers	12	PV String 1b connectors	18	Enclosure vent
2	Status LED	7	AC terminal cover	13	PV string 2 connectors	19	PV Array DC Isolator
3	AC terminal	8	Comm's module	14	PV input ports	20	Wall bracket receiver
4	Comm's port seals	9	Meter module	15	Bracket retainer screw		
5	AC cover seal	10	Module retainer screws	16	Wall bracket		
		11	PV String 1a connectors	17	Wall plug system*		

* For illustration only. Installer to supply suitable fasteners.

SI8000 & SI10000

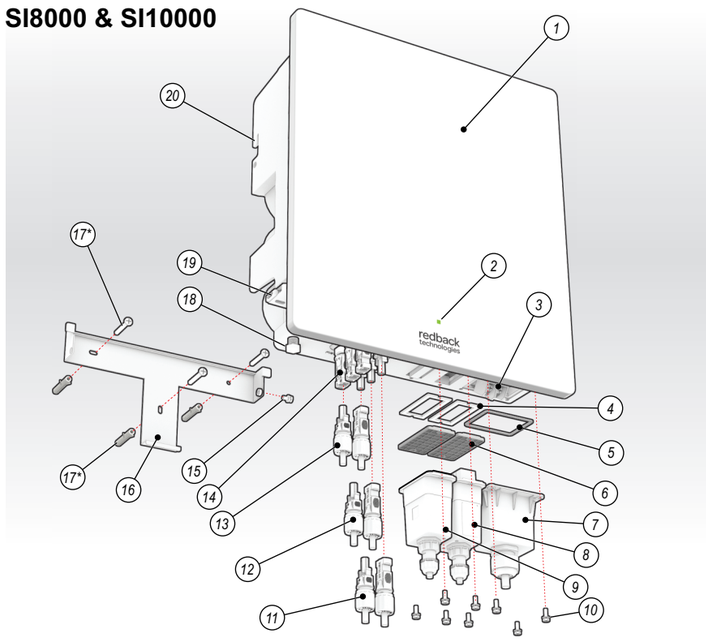

2 Typical Installation

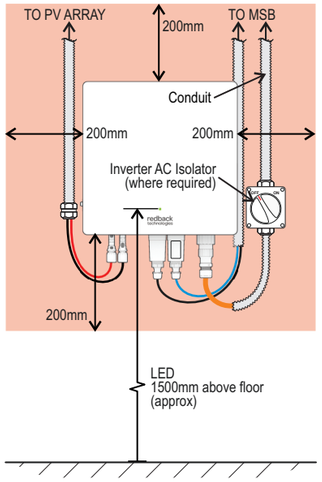

3 Electrical connection overview

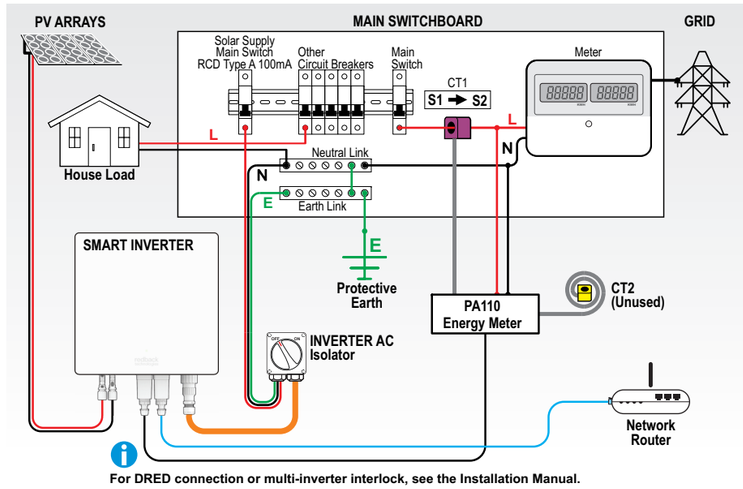

For DRED connection or multi-inverter interlock, see the Installation Manual.

4 Affix Wall Brackets

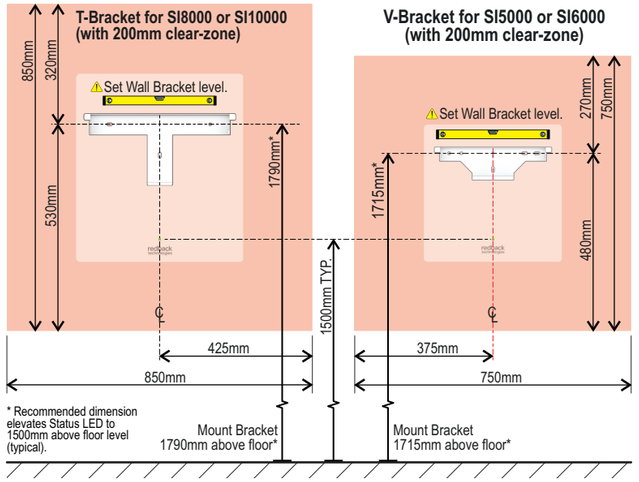

5 Mount Inverter

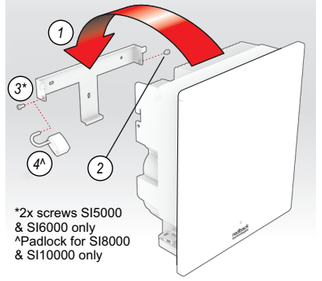

6 Connect PV Arrays

SI5000 & SI6000

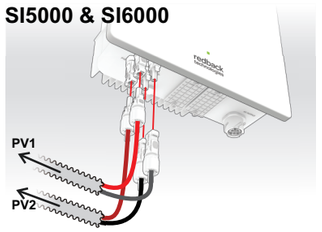

SI8000 & SI10000

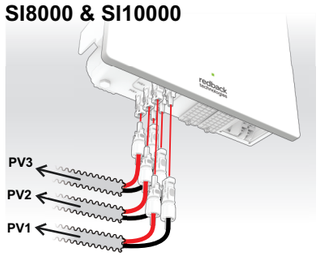

7 Install Power Analyser

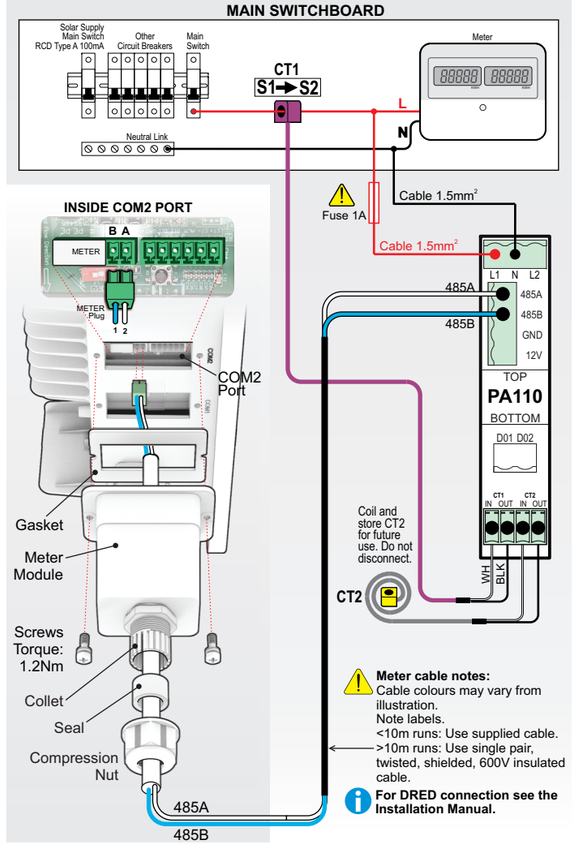

Meter cable notes:
Cable colours may vary from illustration.
Note labels.
<10m runs: Use supplied cable.
>10m runs: Use single pair, twisted, shielded, 600V insulated cable.

For DRED connection see the Installation Manual.

8 AC Connectors

SI5000 & SI6000

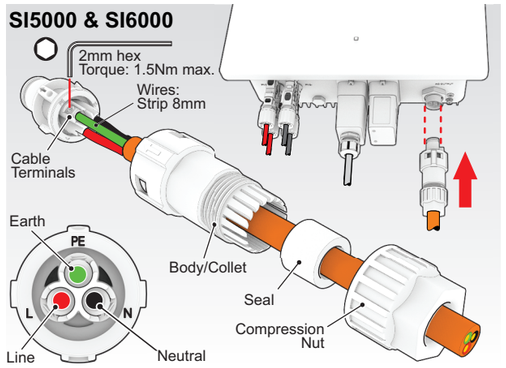

SI8000 & SI10000

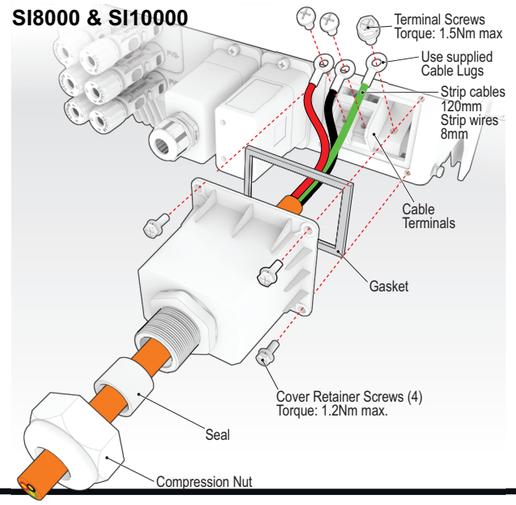

9 Comm's Module

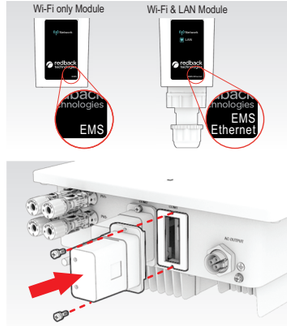

10 Start inverter

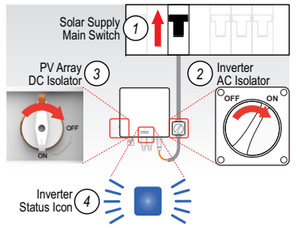

11 Configure settings

Connect using RedbackINSTALL.

Follow the prompts to onboard the inverter & configure settings.

614-00195-01 ©2023 Redback Technologies

Redback Technologies. Building 1015, 80-120 Meiers Rd, Indooroopilly. Qld. 4168
www.redbacktech.com customersupport@redbacktech.com 1300 240 182