Installation Manual

Redback 3-Phase HV Hybrid System

RED-H3-T10HV; RED-H3-T15HV; RED-H3-T20HV;
RED-H3-T25HV; RED-H3-T30HV

RED-P1-BE14HV; RED-P1-BE21HV
RED-P1-BE28HV; RED-P1-BE35HV

V1.2 28Feb2026

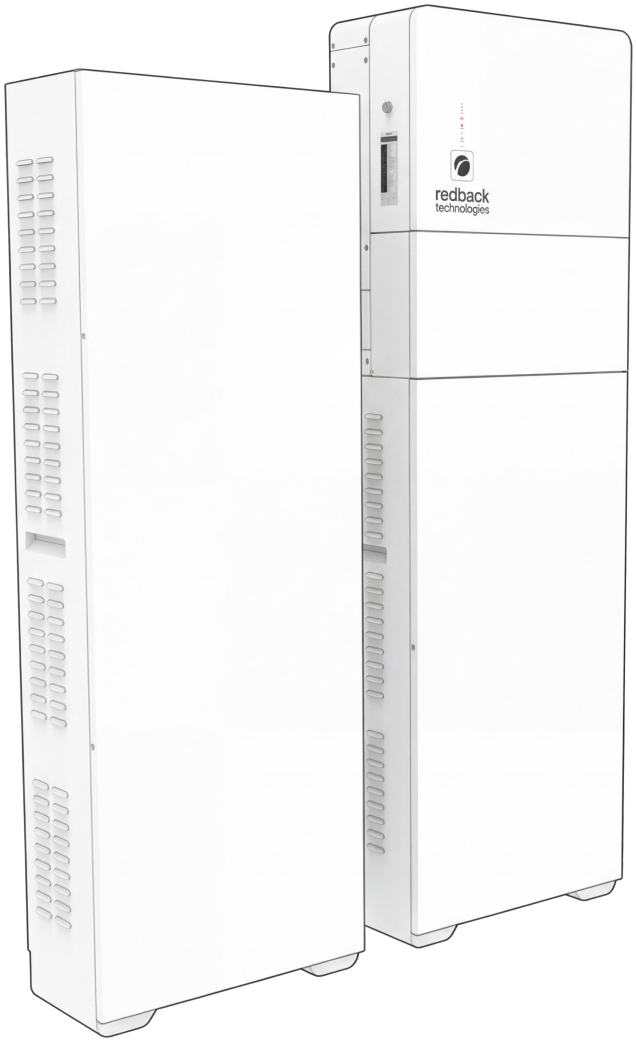

HISTORY

VERSION	ISSUED	COMMENTS
0.1	30Dec24	For review
0.2	20Mar25	Halted for Battery Change
0.3	03Jul25	For 7kWh battery, BE14/21HV enclosures. Issued to CN for technical review specs etc
0.4	09Jul25	For review
0.5	22Jul25	For review
0.6	22Jul25	For review
0.7	23Jul25	For review. Reintroduced BE14HV and BE28HV. Changed BE connectors. Update dimensions and weights.
0.8	24Jul25	Made CN requested changes.
0.9	29Jul25	For certification
1.0	28Aug25	Modify the install method.
1.1	15Sep25	Modify AC input parameters. Change Warranty time; chage RCD Type ;Add note page29
1.2	28Feb26	1. Update label 2. Update the port diagram inside the battery cabinet 3. Modify the specification of the cabinet door screwdriver 4. Modify the color of the battery cabinet socket and wiring harness 5. Modify the schematic diagram of the high-voltage box wiring 6. Add cabinet door installation steps 7. Add battery maintenance steps 8. Add packing list 9. Modify battery parameters

CONTACT INFORMATION

Phone: 1300 240 182
International: +61 7 3180 2325
Address: 172 Evans Road Salisbury QLD 4107 Australia
Email: customersupport@redbacktech.com
Website: redbacktech.com

NOTICE OF COPYRIGHT

Installation Manual Redback 3-Phase HV Hybrid System ©2025 Redback Energy Pty Ltd. All Rights Reserved. This work is copyright, apart from any use permitted under the Copyright Act 1968. No part may be reproduced by any process, nor may any other exclusive right be exercised without the permission of Redback Energy Pty Ltd.

PRIVACY NOTICE

Redback may collect information in accordance with our privacy policy available at redbacktech.com/privacy-policy.

START HERE

This manual is for Installers. It describes the installation and commissioning of a Redback RED-H3-TxxHV 3-Phase Hybrid Inverter; RED-P1-BE21HV and optional second Battery Enclosure; RED-P1-BMSHV module; and RED-P1-7000HV batteries. This manual contains all the information needed for most single-enclosure installations.

Redback provides four softwares: the first two of which are required for installation.

RedbackINSTALL app is used to install and configure Redback systems whilst on-site. Available for Android and iOS.

Portal.redbacktech.com: Access requires registration, and available features are based on registration type.

- Installers can configure and manage Redback systems and fleets, and access product documentation.
- Inspectors can validate the settings applied to systems during installation.
- Owners can monitor their system, with limited control options, and access some documentation.

MyRedback app is used by owners to monitor their system, with limited control options. Installer interaction with this app is usually limited to an introductory session with new owners. Available for Android and iOS.

Redbacktech.com: This is the public-facing website.

TERMS USED IN THIS MANUAL

NAME	ALTERNATIVE NAMES	COMMENT
RED-H3-TxxHV	Inverter; Hybrid inverter; TxxHV	"xx" is the nominal inverter power, in kW.
RED-P1-BExxHV	Enclosure; Battery enclosure; BE; BExxHV;	"xx" is the nominal energy capacity, in kWh;
	BE14HV; BE21HV; BE28HV; BE35HV	• BE21HV and BE35HV differ in external size and capacity otherwise they are very similar. • If installing BE14HV, follow the instructions for BE21HV—The BE14HV is identical except one less battery module is fitted. • If installing BE28HV, follow the instructions for BE35HV—The BE28HV is identical except one less battery module is fitted.
RED-P1-BMSHV	BMS module; BMS	Used in all battery enclosures.
RED-P1-7000HV	7000HV; Battery; Battery module	
All the above parts together	Collectively: The System; the Hybrid System; the 3-Phase Hybrid System; the Redback System.	
RED-P1-BMSHV and multiple RED-P1-7000HV	Collectively: The Stack; the Battery stack	

BEFORE YOU GO TO SITE

1. **Read this manual.**
2. **Book a support call**

   If you think you will require assistance, book Redback Technical Support two days before going to site. This ensures that technical support is reserved for you if you are on-site. The Redback Customer Support team is in Brisbane, Australia and is available 8am-4pm (Brisbane time) Monday to Friday. Book support via:

   - Web: redback.link/support
   - SMS: +61 417 632 065
   - Call from Australia: 1300 240 182
   - Call from New Zealand: +61 7 3180 2325

3. **Register the installation**

   Early registration makes it possible to do a functional, testable installation even if some information is not available e.g., installation in a spec home where the owner's information is not available. You can also pre-assign the installation inspector. Register the installation at redback.link/register select "+Add device".

NEED SOMETHING ELSE?

- The latest version of this manual in pdf format. Download from redback.link/thvim
- The latest version of the Owner's Manual. Download from redback.link/thvom
- Other document? Visit the Redback Document Library: Installer and Owner documentation is available for our current products. Go to redback.link/docs
- Contact the Redback Customer Support Team (Monday to Friday, 8am-4pm AEST)
  - In Australia: 1300 240 182
  - In New Zealand: +61 7 3180 2325
  - Email: customersupport@redbacktech.com

Table of Contents

1. Know your product 8
1.1. Major components or features 8
1.2. Inverter connectors 9
1.3. Control panel features 10
1.4. System functional overview 10
1.5. System status panel (LEDs) 11
1.6. Dimensions and weights 12
1.7. Installation space 12
1.8. Compatibility and limitations 13
1.9. Backup circuit design notes 13
2. System Installation 15
2.1. Installation overview 18
2.1.1. Before you go to site 18
2.1.2. At site 20
2.1.3. Installation process summary 20
2.2. Guide to AS5139 installation requirements for BExxHV 21
2.2.1. Extent of bottom of system 22
2.2.2. Installation on an exit path 22
2.2.3. Installation on a blank wall (Be21HV + optional BE) 23
2.2.4. Installation near a corner (Be21HV + optional BE) 24
2.2.5. Installation on a low, blank wall (Be21HV + optional BE) 25
2.2.6. Installation near a low ceiling corner (Be21HV + optional BE) 26
2.3. Preliminary electrical installation 27
2.3.1. Overview 27
2.3.2. Running cables to the inverter 27
2.4. Install the primary BE21HV Battery Enclosure 28
2.4.1. Overview 28
2.4.2. Pre-assembly 28
2.4.3. Install the Battery Enclosure 29
2.5. Installing a secondary battery enclosure 30
2.5.1. Installing a BE21HV secondary enclosure 30
2.5.2. Installing a BE35HV secondary enclosure 30
2.6. Prepare the TxxHV inverter for installation 31
2.7. Install the Inverter Wall Mounting Frame 31
2.8. Install the inverter 33
2.9. Antennas 33
2.9.1. Wi-Fi antenna 33
2.9.2. 4G module 33
2.10. Connect primary Battery Enclosure 34
2.10.1. Battery DC power 34
2.10.2. BMS 34
2.10.3. Battery system earth 34
2.11. Connect a secondary battery enclosure 34
2.12. Terminate and connect 230V AC Cables 35
2.12.1. Assembly notes 35

2.12.2. AC Plug Assembly 35
2.12.3. Connect AC cables to the inverter 35
2.12.4. At the main Switchboard and or Backup sub-board 36
2.13. PV cables 37
2.13.1. At the inverter 37
2.14. Communications ports 38
2.14.1. Overview 38
2.14.2. Ethernet (recommended) 39
2.14.3. Energy Meter and DRED 39
2.15. DRED 39
2.15.1. Method for asserting DRM 40
2.16. Install the Energy Meter & CTs 40
2.16.1. Overview 40
2.16.2. Energy Meter Installation notes 40
2.16.3. Eenergy meter product information 41
2.16.4. Installation process- Energy meter 42
2.16.5. Installation Process- CTs 42
2.16.6. Independent installations 43
2.16.7. AC-Coupled installations 44
2.16.8. Smart Load Control 44
3. Battery Installation 45
3.1. Overview 45
3.2. Allowable battery combinations and storage capacities 45
3.3. Stacking the batteries and BMS module 47
3.4. Connect Battery Enclosure to BMS module 48
3.5. Connect BMS to Battery Stack 48
4. Commissioning 50
4.1. Overview 50
4.2. Commission batteries 50
4.3. Inverter start-up 50
4.3.1. Inverter start-up notes 50
4.3.2. Inverter start-up procedure 51
4.4. Onboard the inverter 52
4.4.1. Connection notes (to Owner's inverter) 52
4.4.2. Connect RedbackINSTALL to the inverter 53
4.4.3. Onboarding (Connect to the local network) 54
4.5. Notes on Regional Safety Settings 55
4.6. Notes on Export and Generation Limits 55
4.7. Redback firmware version* 56
4.7.1. Identify firmware version using RedbackINSTALL 56
4.7.2. Update firmware using RedbackINSTALL 56
4.7.3. Identify firmware version using the Redback Portal 57
4.8. Compliance inspections 58
4.8.1. Assign an inspector 58
4.8.2. Compliance Inspection 59
5. Inverter operation 60

5.1. Shutdown procedure 60
5.2. Bypass switch operation 61
5.3. Inverter restart 62
5.4. Inverter operating modes 63
5.4.1. Auto mode 63
5.4.2. Standby mode 63
5.4.3. Charge Battery Mode 63
5.4.4. Discharge Battery mode 64
5.4.5. Backup mode 64
6. Troubleshooting 65
6.1. Earth fault alarm 65
6.2. Inverter Status LEDs 65
6.3. Energy Meter diagnostics 67
6.3.1. Energy Meter features 67
6.3.2. Energy Meter/CT troubleshooting 67
6.4. System Lockout 67
6.5. Internet connection problems 68
6.6. Inverter unexpected shutdown 68
6.7. Reset batteries 70
7. Maintenance 71
8. Battery Maintenance 73
9. Specifications 75
10. Related links and documents 78
11. Close-up and handover 78
11.1. Close-up 78
11.2. Handover to owner 79
12. Single Line diagram 80
12.1. Independent installations 80
12.2. AC-Coupled installations 81

1. Know your product

1.1. Major components or features

Due to continuous product improvement, the actual product may vary slightly from the illustrations in this document.The Hybrid Inverter and Battery Enclosure mentioned in the manual do not necessarily have to be used together.You can use other approved inverter or battery products recommended by Redback Technologies.

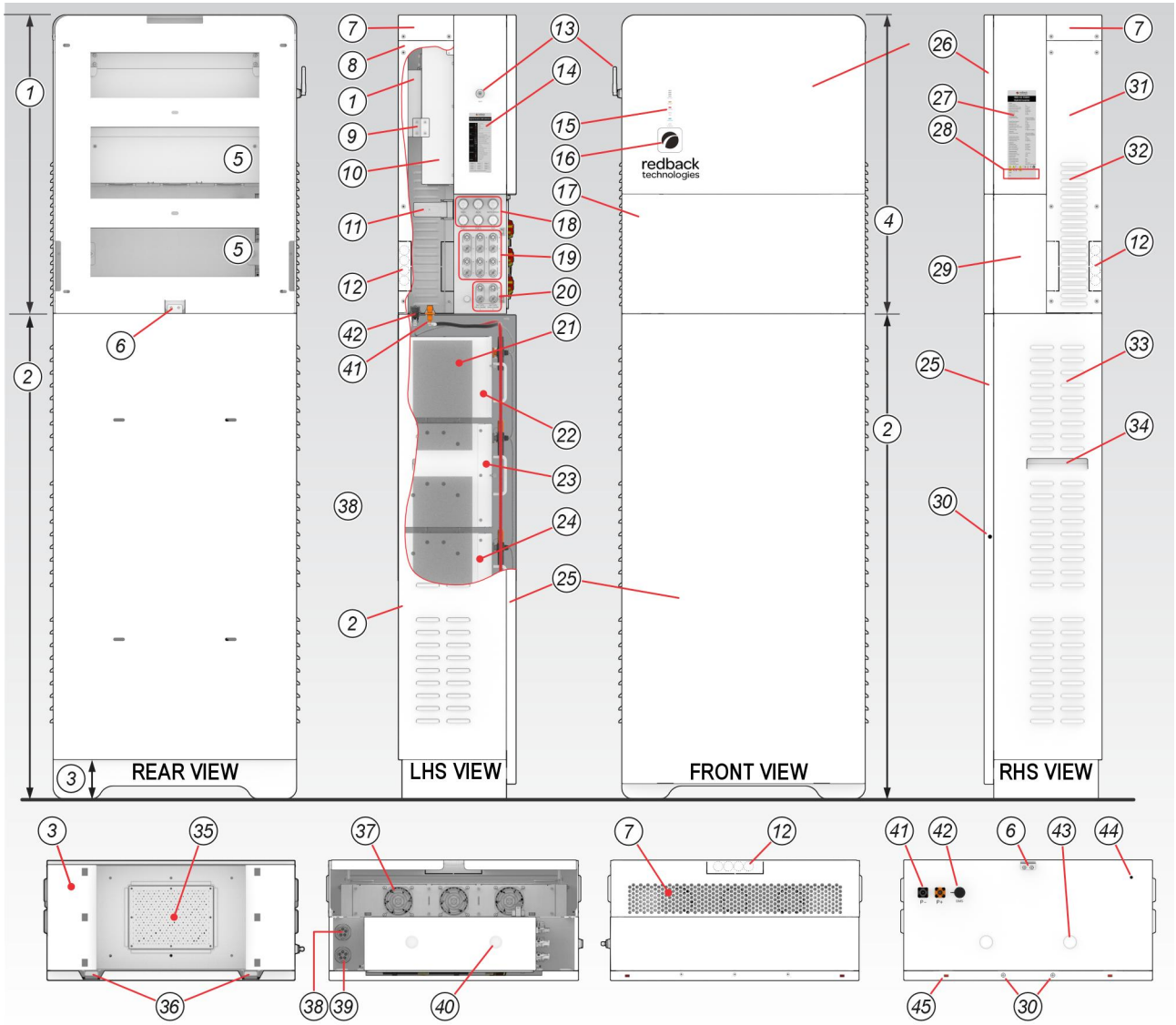

01a SYSTEM BOTTOM VIEW INVERTER BOTTOM VIEW INVERTER TOP VIEW BATT ENCLOSURE TOP VIEW

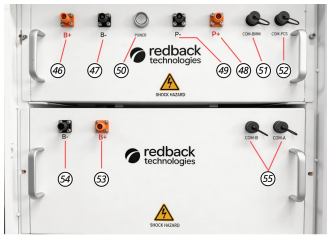

INSIDE VIEW OF BATT CABINET

#	PART NAME	#	PART NAME	#	PART NAME
1	Inverter wall mounting frame	20	Battery Enclosure DC connectors	39	Grid AC Connector
2	Battery Enclosure section (BE)	21	Foam filters (internal)	40	Inverter alignment rebate
3	BE Foot (stand) section	22	BMS Module	41	BE DC Connectors
4	Inverter section (INV)	23	Master Battery	42	BE BMS connector

5	INV Cable exit zones	24	Worker Batteries (up to 4 in BE35HV)	43	Alignment pin (BE14/21HV only)
6	INV Alignment pins (BE14/21HV only)	25	Battery Enclosure Front Cover	44	INV-to-BE Earth terminal
7	Inverter Top Cover Ventilated	26	Inverter Front Cover	45	BE Front Cover Installation assist clips
8	INV LH Side cover (cutaway)	27	Specification Label	46	Battery DC Positive sockets (B+)
9	Wall mount-to-Inverter connector	28	Inverter Serial Number location	47	Battery DC Negative sockets (B-)
10	INV Heatsink (shroud removed)	29	INV AC-side Connectors Cover	48	Inverter DC Positive sockets (P+)
11	4G Module (Optional)	30	Front Panel Retainer Screws	49	Inverter DC Negative sockets (P-)
12	Breakout for conduit entry	31	Inverter RH Side Cover Ventilated	50	Power Switch
13	Wi-Fi Antenna	32	Inverter Cooling Vents	51	BMS and battery communication(COM-BMM)
14	Status LED Legend	33	Battery Enclosure Cooling Vents	52	PCS and BMS communication(COM-PCS)
15	System Status Indicators (LEDs)	34	BE Grab Handle	53	Battery DC Positive sockets (B+)
16	NFC Antenna/Logo	35	BE Foot Cooling Vent	54	Battery DC Negative sockets (B-)
17	INV Control Panel Cover (removable)	36	BE Front Cover Bayonets & Receivers	55	Communication between batteries(COM-A COM-B)
18	RJ45 comm's connectors	37	Heatsink Fans x3		
19	PV Array connectors	38	Backup AC Connector		

1.2. Inverter connectors

#	CONNECTOR NAME
1	4G Module (Optional)
2	4G Module Socket
3	PART1 (future use)
4	BMS1 (comm's to BE #1)
5	BMS2 (comm's to BE #2)
6	METER/DRED (shared cable, to Meter)
7	ETH (Ethernet to Owner's network)
8	PART2 (future use)
9	MPPT1 (for 2x PV strings, paralled internally)
10	MPPT2 (for 2x PV strings, paralled internally)
11	MPPT3 (for 2x PV strings, paralled internally)
12	BE #1 (DC input/output)
13	BE #2 (DC input/output)
14	Cabinet vent
15	Backup AC Socket
16	Grid AC Socket
17	INV-to-BE Earthing point

CONNECTORS

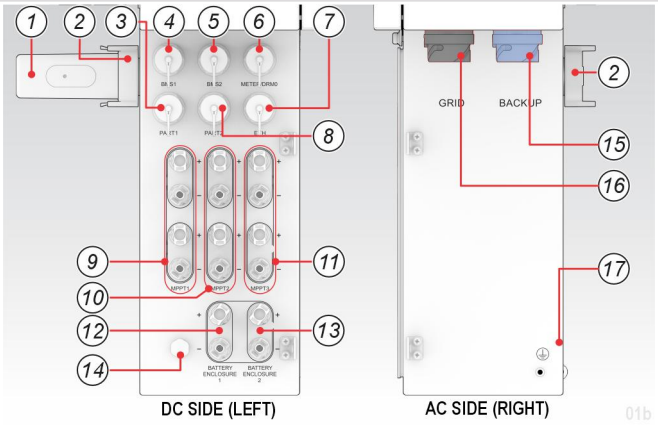

1.3. Control panel features

#	FEATURE
1	PV Array DC Isolator
2	Battery Enclosure 1 DC Isolator
3	Battery Enclosure 2 DC Isolator
4	Isolator Lock Plunger (typical)
5	Backup AC Isolator
6	Bypass Switch
7	Inverter AC Isolator
8	Hinged Switch Cover
9	Thumbscrew
10	Emergency Shutdown Procedure
11	Hinged Switch Cover latching and lockout tongue

ILLUSTRATION

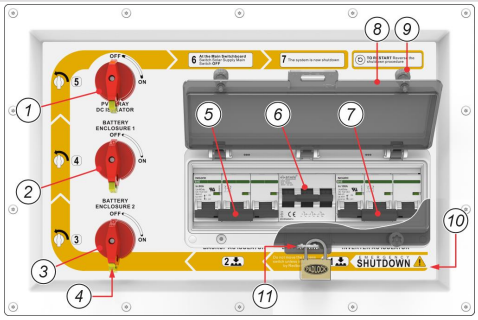

1.4. System functional overview

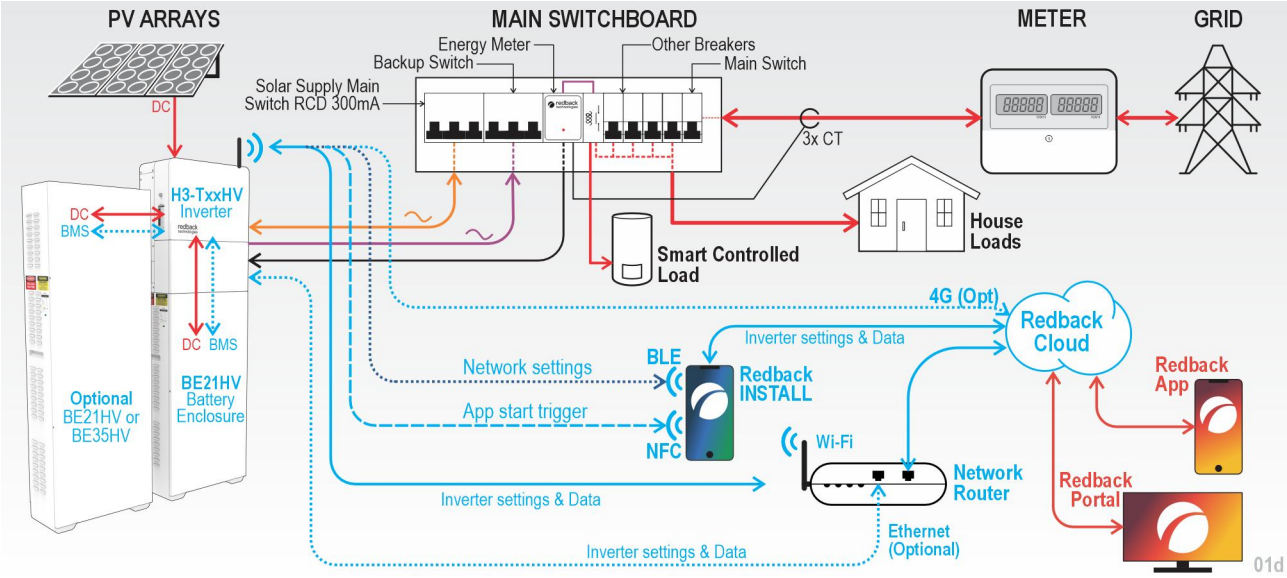

H3-TxxHV hybrid system functional overview

1.5. System status panel (LEDs)

The Redback inverter has an LED array to show system status and aid diagnosis. The table below lists LED indications. Section 6.2 lists possible solutions to LED indicated problems.

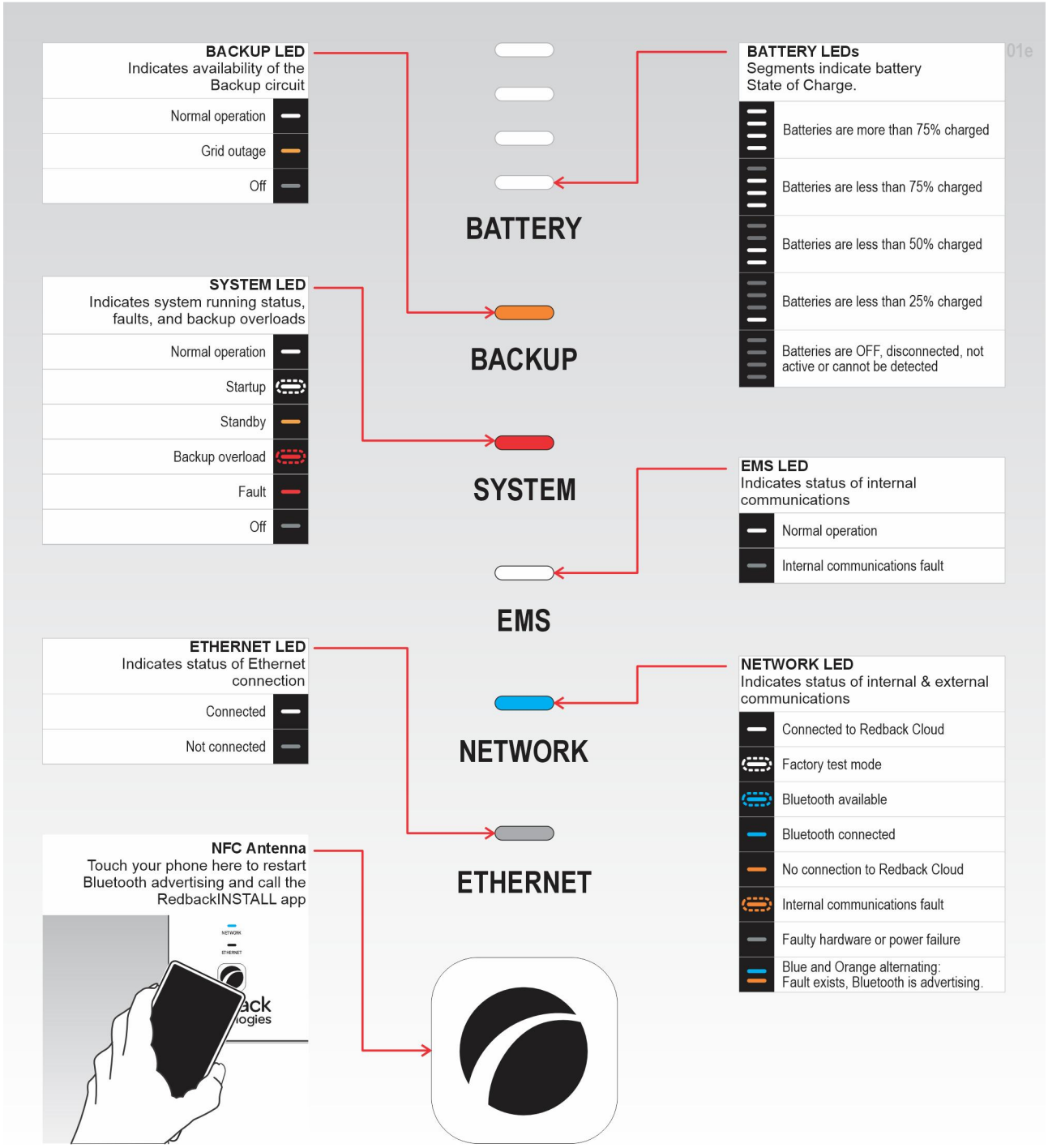

1.6. Dimensions and weights

ITEM	CAPACITY (NOMINAL)	HEIGHT (MM)	WIDTH (MM)	DEPTH (MM)	SHIPPING MASS (KG)	COMPONENT MASS (KG)
Inverter	na	800	668■	315	79	Mounting Frame: 3.6 Inverter: 65
Enclosure BE14/21HV	14/21kWh	1300	652	315	49.5	42.6•
Enclosure BE28/35HV	28/35kWh	1900	652	315	68	53.6•
BMS Module: RED–P1–BMSHV	na	220	626	288	17.1	13.4
Battery: RED–P1–7000HV	7kWh	278	626	288	65.7	62
MINIMUM INSTALLATION						**INSTALLED WEIGHT**
With BE14HV (2 batteries)	14kWh	2100♦	668■	315	–	248.6 kg
WITH OPTIONAL SECONDARY ENCLOSURE						
With 2nd BE14/21HV enclosure		2100	1470○	315	–	+56kg
With 2nd BE28/35HV enclosure		2100	1470○	315	–	+67kg
Additional batteries	+7kWh	–	–	315	–	+62kg each

•Excluding BMS module, batteries and cables. ■Excludes Wi-Fi antenna. Includes all other fixed protrusions. ♦Minimum. Installed height varies slightly and accounts for internal overlap. ○With minimum permitted space between enclosures.

1.7. Installation space

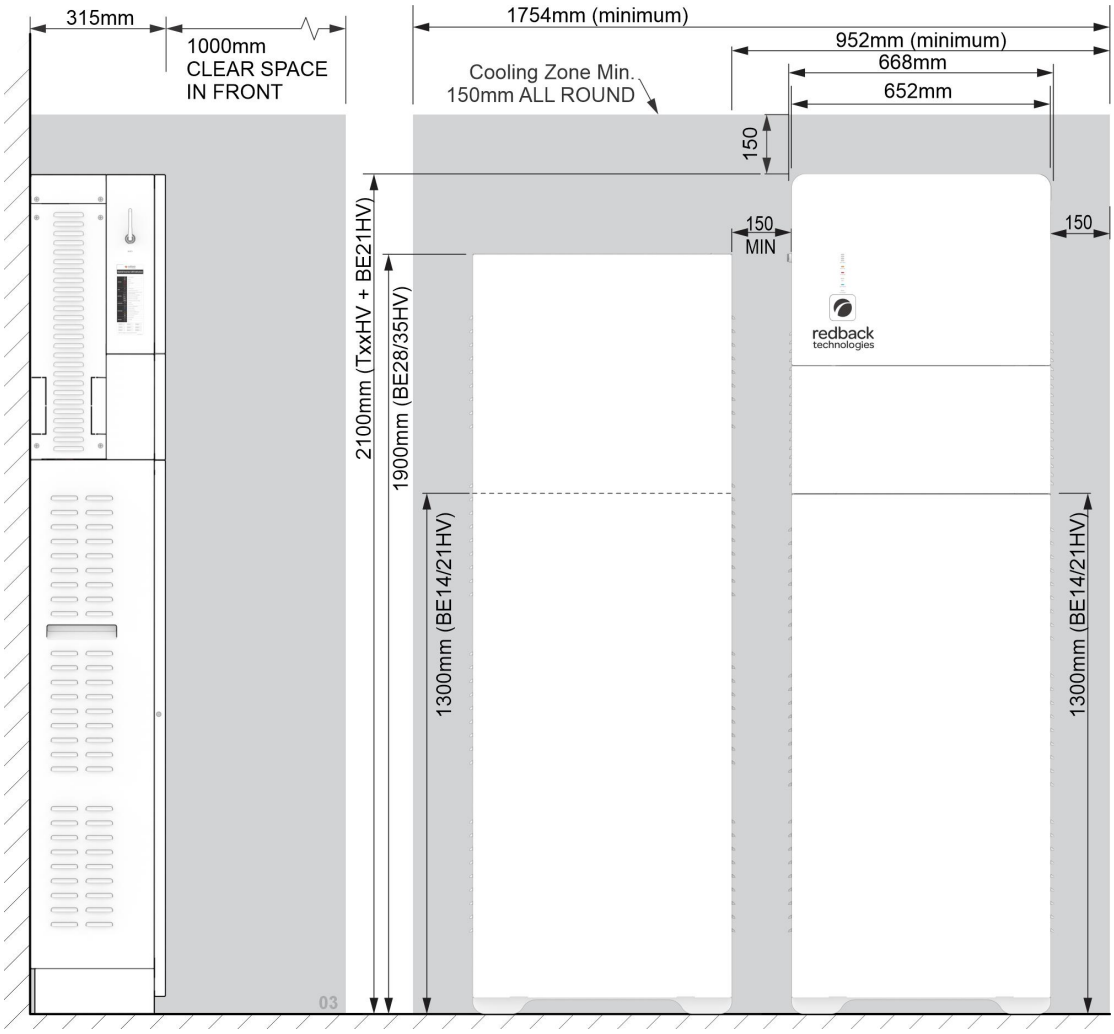

1.8. Compatibility and limitations

The Redback TxxHV is a transformer-less Inverter; all other components of the PV system must be compatible with this Inverter architecture.

AC-coupled installations are possible, enabling an existing grid-tied inverter's output to charge a Redback controlled battery.

The Redback TxxHV Inverter and BExxHV Battery Enclosure are not suitable for:

- Off-Grid installations, where there is not normally a grid connection.
- Locations without internet access. Installation cannot be completed without an internet connection. The owner must maintain a stable connection to the Redback Cloud otherwise warranty support will be affected.
- Installation in full-sun locations: the inverter may overheat resulting in reduced efficiency and or automatic shutdown.
- Exposed locations where wind-driven rain may penetrate the enclosure.
- Use with generators.
- Use with 5Ghz Wi-Fi networks.

Multiple inverter energy systems

- Redback Hybrid systems have not been tested for Section 5 of AS4777.2:2020—installation of TxxHV inverters in a multiple inverter energy system requires they are installed & used as required by AS/NZS 4777.1.

WARNING. This equipment is NOT intended for use with life support equipment or other medical equipment or devices.

Note: This product supports Redback RED-P1-7000HV batteries only. Other batteries do not work in this product.

WARNING. Installation in violation of these limitations may void the warranty (refer to the Warranty

1.9. Backup circuit design notes

The TxxHV inverter includes one 3-phase backup output activated during a grid outage and powered by the system batteries and or available PV. Loads on the backup circuits must be selected to extend the backup power availability and avoid overloading, noting:

- Continuous battery-only power delivery up to the values shown at right.
- Peak power delivery of up to the values shown at right, for up to three seconds (for high starting currents).
- System self-protects and shuts down if power limits are exceeded.
- Output is reduced above 45°C ambient temperature.
- System shuts down if 60°C ambient is exceeded.

The backup circuits are suitable for low power or intermittent use devices such as refrigerators; freezers; LED or florescent lights; small kitchen appliances; computers; radios; televisions.

WARNING. Batteries must be fitted if a backup circuit has been connected to the inverter. PV-only power is not satisfactory for backup circuits—backup load and PV power are variable and unpredictable—when backup load exceeds PV power the Inverter will automatically shut down and restart.

Model	Max. Continuous Battery-only power (VA)	Peak On-grid Power (VA, for 3s)
T10HV	9999	15000
T15HV	15000	22500
T20HV	20000	30000
T25HV	25000	37500
T30HV	29999	45000

High starting-current or high operating-current loads must not be connected to the Backup circuit e.g., hot water systems; air conditioners; ovens or cooktops; spas or saunas or pool pumps.

Backup circuit	New circuit needed?	☐ Yes ☐ No	
	Backup circuit inclusions	☑ **Acceptable**	☒ **Not Acceptable**
		Refrigerators and freezers	Critical medical devices
		Fans	Air conditioners & heaters
		Small, occasional use, plug-in appliances e.g., microwaves, kettles	Ovens and cooktops
		TVs, radios, telephones	Home theatres & projectors
		Computers, tablets, routers	Hot water systems
		Mobile phone or small device chargers	Spas, saunas, pool pumps
		Soft-start household water pumps	Battery chargers & corded power tools
		Low energy LED or CCFL lights	Incandescent or high-power lighting

2. System Installation

IMPORTANT SAFETY INSTRUCTIONS – PLEASE READ

This document has important safety instructions for Redback Technologies products.

Read all the instructions and cautionary markings on the product and any accessories or other equipment included in the installation.

Failure to follow instructions or operate equipment correctly may result in death, injury, equipment damage or failure, or a warranty claim being denied. Use caution to prevent accidents.

AUDIENCE

Installation, maintenance, and connection of inverters must be performed by qualified personnel, in compliance with local electrical standards, wiring rules and the requirements of local power authorities and/or companies (e.g., AS4777 and AS/NZS 3000 in Australia). The Redback system strictly conforms to all related safety rules in design and test.

Safety regulations relevant to the location should be followed during installation, operation, and maintenance. These instructions are for personnel who:

- Meet all local and governmental code requirements for licensing and training for the installation of electrical power systems with AC and DC voltage up to the Maximum Input Voltage (Vmax) as listed in the product specifications.
- Have appropriate accreditation for installing grid–connected PV systems and energy storage systems.
- Have knowledge of the functional principles and operation of grid–connected systems and knowledge of the installation of electrical devices
- Understand the risk associated with installing and using electrical devices and can implement appropriate risk management strategies.
- During the preceding 12 months, completed Redback installation training for the Redback TXXHV Inverter and Battery Enclosure.

SYMBOLS USED IN THIS MANUAL

SYMBOL	DEFINITION	SYMBOL	DEFINITION
	LETHAL DANGER! Risk of electrocution.		**CAUTION!** Hazard to equipment
	DANGER! Risk of electrical shock.		**CAUTION!** Explosion hazard
	WARNING! Hazard to human life		**CAUTION!** Lightning strike hazard.
	WARNING! Burn hazard		**CAUTION!** Sharps hazard.
	TIPPING HAZARD. Do not leave unattended.		**CAUTION!** Fire hazard.
	HEAVY LIFT. Seek help.		**Inspect all parts.** Contact Redback if any part is damaged or missing.
	PPE REQUIRED. . Use personal protective equipment.		**WAIT** for the specified period to elapse.
	Information. The information provided is important for the correct installation, operation and or maintenance of the equipment. Failure to follow the recommendations may result in death, personal injury, equipment damage or failure, or a warranty claim being denied.		

SYMBOLS USED ELSEWHERE

SYMBOL	DEFINITION	SYMBOL	DEFINITION	SYMBOL	DEFINITION
	HEAVY! Bend knees to lift.		**FRAGILE.** Handle with care. Do not tip. Do not sling.	5min	**DELAY.** Wait specified time.
	HEAVY! Two–person lift needed.		This product has recyclable parts. Dispose of correctly.		**REFER TO DOCUMENTS.**
KG	**PACKAGE MASS.** In kilograms.	6	**STACKING LIMIT.** E.g., stack packages six high or less.		Do not dispose as household waste.
	THIS SIDE UP. Transport, handle and store the package with the arrows pointing up.		**KEEP DRY.** Protect the product from excessive humidity. Store under cover.		

GENERAL SAFETY

SYMBOL	DEFINITION
	WARNING: Limitations on use This equipment is NOT intended for use with life support equipment or other medical equipment or devices.
	CAUTION: Equipment damage. Only use components or accessories recommended or sold by Redback Technologies or its authorised agents.
	IMPORTANT. Do not install this equipment if it appears be damaged in any way. Contact Redback Technologies for assistance. Do not return goods without authorisation.

PERSONAL SAFETY

SYMBOL	DEFINITION
	WARNING: PERSONAL INJURY • Use safe lifting techniques when handling this equipment. For guidance visit safeworkaustralia.gov.au or contact your local WHS authority. • Use standard safety equipment when working on this equipment such as safety glasses, ear protection, steel–toed safety boots, safety hard hats, etc • Use standard safety practices when working with electrical equipment e.g., remove all jewellery, use insulated tools, wear cotton clothing etc. • Never work alone when installing or servicing this equipment. Have an assistant to help if necessary. • Do not touch the inverter during operation. The temperature of some parts may exceed 60˚C during operation. After shutdown, allow the inverter to cool for at least 5 minutes before touching. • Ensure that children, pets, and other animals are kept away from the inverter, solar arrays, batteries and utility grid components. • If the equipment is used in a manner not specified by the manufacturer, the protection provided by the equipment may be impaired.

BATTERY SAFETY

SYMBOL	DEFINITION
	IMPORTANT • Use the battery types recommended by Redback Technologies. Follow the battery manufacturer's recommendations for installation and maintenance. • Insulate batteries against freezing temperatures. Note: batteries freeze more easily when discharged. • Remote or automatic generator control systems: disable the starting circuit and/or disconnect the generator from its starting battery while performing maintenance.

EQUIPMENT SAFETY

SYMBOL	DEFINITION
	WARNING: IMPROPER USAGE The protection provided by the equipment may be impaired if not installed and used in a manner not specified by the manufacturer.
	WARNING: LETHAL VOLTAGE • Identify all sources of energy. Ensure ALL sources of power are disconnected before performing any installation or maintenance on this equipment. Confirm that the terminals are de-energised using a validated voltmeter (rated for a minimum 1000 VAC and 1000 VDC. • Do not perform any servicing other than that specified in the installation instructions unless qualified to do so or have been instructed to do so by Redback Technologies technical support personnel. • Solar arrays may be energised even in low ambient light. Install a high voltage DC rated disconnect, breaker, or accessible fuse box to ensure a safe disconnect from the system (depending on local code requirements). • To avoid electric shock, disconnect the DC input and AC input of the inverter at least 5 minutes before performing any installation or maintenance. • Completely disconnect all sources of power before continuing with any maintenance. Do not open the upper inverter compartment of the system. • Do not tighten the AC and DC terminals or pull on the AC and DC wiring when the inverter is running.
	WARNING: BURN HAZARD • External and internal parts may be hot. Do not remove any cover during operation or touch any internal parts. Allow time for internal parts to cool down before attempting to perform any maintenance.
	WARNING: FIRE HAZARD • Do not keep combustible or flammable materials in the same room as the equipment. The Redback system contains relays and switches which are not ignition protected. • Ensure AC, DC and ground cable sizes conform to local codes and are fit for purpose. Ensure all conductors are in good condition. Do not operate the unit with damaged or substandard cabling.
	CAUTION: EQUIPMENT DAMAGE • When connecting cables from the inverter to the battery terminals, ensure the proper polarity is observed. Connecting the cables incorrectly can damage or destroy the equipment and void the product warranty. • Thoroughly inspect the equipment prior to energising. Ensure no tools or equipment have been left behind. • Ensure clearance requirements are strictly enforced. Keep all vents clear of obstructions that can prevent proper air flow around, or through, the unit. • Do not open the upper front cover of the inverter. Apart from performing work at the wiring terminals (as instructed in this manual), touching or changing components without authorisation may result in death, injury, equipment damage or failure, or a warranty claim being denied. • Static electricity may damage electronic components. Take appropriate steps to prevent such damage to the inverter; otherwise, the warranty may be annulled. • Ensure the output voltage of the proposed solar array is lower than the maximum rated input voltage of the inverter; otherwise, the inverter may be damaged, and the warranty annulled. • Solar modules should have an IEC61730 Class A rating.
	CAUTION: LIGHTNING PROTECTION. PV arrays in the system should be protected by a Lightning Protection System as described in AS/NZS5033:2021.

2.1. Installation overview

Installation by non-approved installers may void the product warranty.

You are approved to install Redback products if you:

- Are a Redback registered and qualified installer, and
- Hold the required qualifications for installing grid-connected inverters, and
- Have completed Redback approved installation training for this product, and

Not sure?

Contact Redback on 1 300 240 182 if you are unsure of your approval status

2.1.1. BEFORE YOU GO TO SITE

2.1.1.1. Simple preparations will help the installation run smoothly.

1. Is there internet at site? Installation cannot be completed without an internet connection. Longer term, the owner must maintain a stable* connection to the Redback Cloud otherwise warranty support will be affected.
2. If you think you will require installation assistance, book a support call at redback.link/support
3. Register the installation at redback.link/register (+Add device)
4. Gather the required tools
   a. Standard hand and power tools
   b. DC voltage and current testing equipment (multi-meter)
   c. Tape measure and spirit level.
   d. Normal electrician's PPE
   e. Internet connected device with RedbackINSTALL app.

Gather the following information for use during registration, installation, onboarding, and commissioning.

Inverter serial number:	
Battery Enclosure serial	
Your Redback Installer Login (apply at redback.link/apply)	
INSTALLATION DETAILS	
Owner's details (required)	Full name:
	Installation
	Email:
	Mobile:
Owner's Wi-Fi details	Wi Fi
	Wi Fi
INSTALLATION CONFIGURATION	
Regional Safety Zone	☐ Australia A ☐ Australia B ☐ Australia C ☐ New Zealand
Soft Export Limit	
Hard Export Limit	
Soft Generation Limit	
Hard Generation Limit	
Compliance Inspector	
Relay usage (optional)	☐ Timer scheduled

	☐ Smart scheduled
	☐ Relay not used

2.1.2. AT SITE

Conduct a risk assessment.

Redback recommends that installers complete a risk assessment of the proposed works, to the standard required by relevant authorities.

Ensure a stable internet connection is available.

If using Wi–Fi, measure the signal strength at the proposed installation site. Review installation plan if Wi–Fi signal is less than –70dBm, otherwise ongoing connection problems may occur.

Wi–Fi Strength[1] :	☐ None[2]	☐ Weak (< -70dBm)[3]	☐ Good (approx. -70dBm)	☐ Strong (> -70dBm)

[1]Test inverter location before installation; [2]Installation cannot be completed without internet: Use Ethernet, improve Wi–Fi signal strength, or find a better location; [3]Find an installation site with Good or better Wi–Fi strength.

Review the proposed system location.

The inverter must be floor mounted and attached vertically to a wall using installer selected fasteners, The inverter is IP65; The battery enclosure is IP54. It is suitable for indoor or outdoor installation.

- Is the location out of direct sunlight? Reduce heat load by shading or installing out of full sun: ideally, the installation will be against a south facing external wall, and under eaves.
- Does the battery enclosure location meet the requirements of AS/NZS5139? See section 2.2 of this manual for basic AS5139 guidance and consult the stand for detail.
- Is there 150mm minimum clearance all around (for cooling) and at least 2250mm height available?
- Is the floor surface flat? Are packers needed to level the product?
- Is the wall flat (to prevent product distortion) and structurally sound (to prevent toppling)? Are spacers needed?
- How will cables be routed to the inverter?

2.1.3. INSTALLATION PROCESS SUMMARY

Hardware (in-the-box)

- Install Battery Enclosure.
- Install Wall Mounting Frame.
- Install Inverter.
- Install BMS and battery modules, including earth screws.
- Connect all battery enclosure internal and external DC and communications cables.

Electrical

- Run and connect DC cables and conduits from PV to the Inverter.
- Run and connect Grid and Backup AC cables and conduits from the main or sub–board to the Inverter.
- Install any non–standard accessories e.g., relays or new backup circuit.
- Install the Energy Meter. Run ethernet from inverter to meter, using the supplied cable, if long enough.
- Run ethernet from the owner's network router to Inverter (Recommended. Installer to fabricate cable).
- Complete connections from Inverter to Battery Enclosure.

Commissioning

- Test the electrical installation.
- Power ON the BMS module to start battery system.
- Power ON the inverter.
- Commission the system using RedbackINSTALL.
- Fit all covers.
- Clean worksite.
- Document the installation, and handover to owner.

2.2. Guide to AS5139 installation requirements for BExxHV

For AS5139:2019 compliance, the BExxHV is defined as a pre-assembled battery system. There are BExxHV variants:

- BE14HV has a BMS module and 2 battery modules. BE21HV is the same external size as BE14HV and has a BMS module and 3 battery modules. For the intent of AS5139, BE14HV and BE21HV are identical.
- BE28HV is taller than BE21HV and has a BMS module and 4 battery modules. BE35HV is the same external size as BE28HV and a BMS modules and 5 battery modules. For the intent of AS5139, BE28HV and BE35HV are identical.

AS5139 prescribes allowable battery system locations and fire-proofing requirements. AS5139 is referenced in AS4777.1, AS3000 and the BCA, and all new or modified battery system installations must comply.

The installer is responsible for completing installation in accordance with all relevant standards and regulations. The key AS5139 requirements for BExxHV installation are:

- Install the BExxHV against a wall in a clear-zone having no windows, doors, exits, vents, or appliances not related to the BExxHV. The clear-zone extends 600mm from the sides and 900mm above the BExxHV.
- Fireproof any combustible wall in the clear zone if a habitable room exists on the opposite side of that wall. Fireproofing materials must comply with AS1530.1.
- Fireproof any structure e.g., ceiling or eave less than 900mm above the BExxHV to the full width of the clear zone and the lesser of 963mm from the wall or to the edge of the structure.
- Use fire retardant sealant to seal all penetrations through the wall that exceed 5mm diameter.
- Ensure 1m clearance in front of the BExxHV if it is located on a fire exit path e.g., corridor, hallway or lobby.
- Protect the BExxHV from vehicle impact if this is a likely occurrence: use a bollard or similar device.

The most likely installation scenarios are illustrated below: any clear zone may need to be fireproofed. The scenarios illustrated presume a TxxHV is installed on a BE21HV (This affects the minimum required ceiling height).

2.2.1. EXTENT OF BOTTOM OF SYSTEM

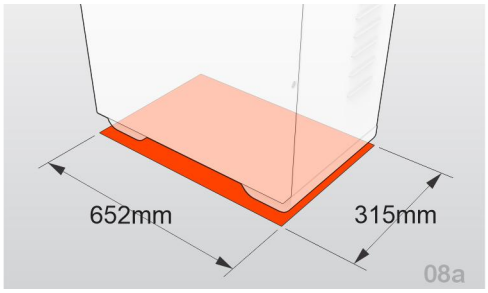

2.2.2. INSTALLATION ON AN EXIT PATH

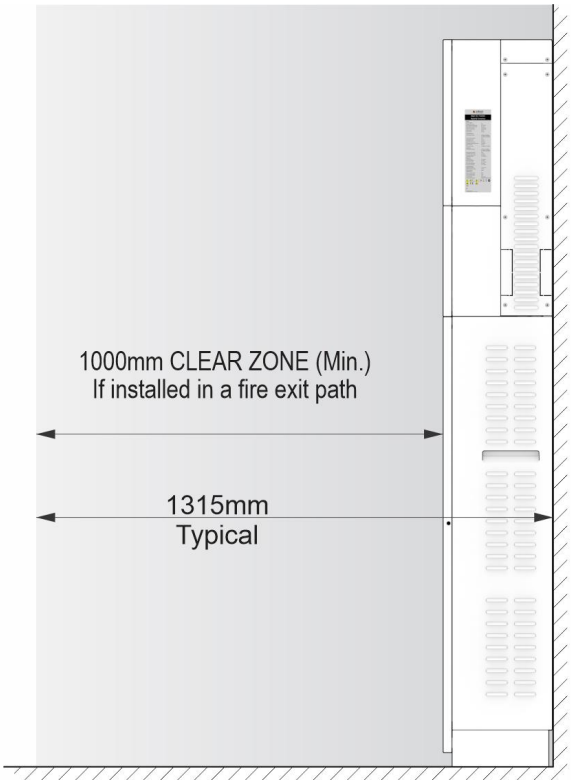

2.2.3. INSTALLATION ON A BLANK WALL (BE21HV + OPTIONAL BE)

Note: For BE35HV installation, a ceiling height of less than 2.8m requires fire protection. See section 2.2.5.

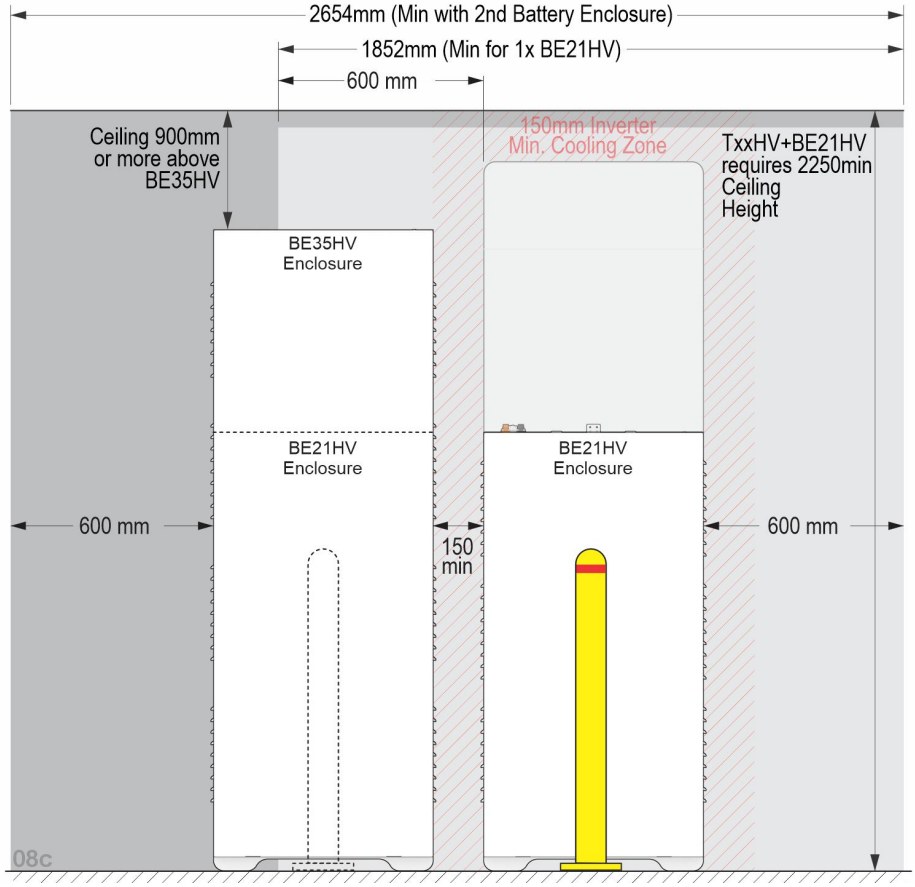

2.2.4. INSTALLATION NEAR A CORNER (BE21HV + OPTIONAL BE)

Note: For BE35HV installation near a corner, a ceiling height of less than 2.8m requires fire protection. See 2.2.6.

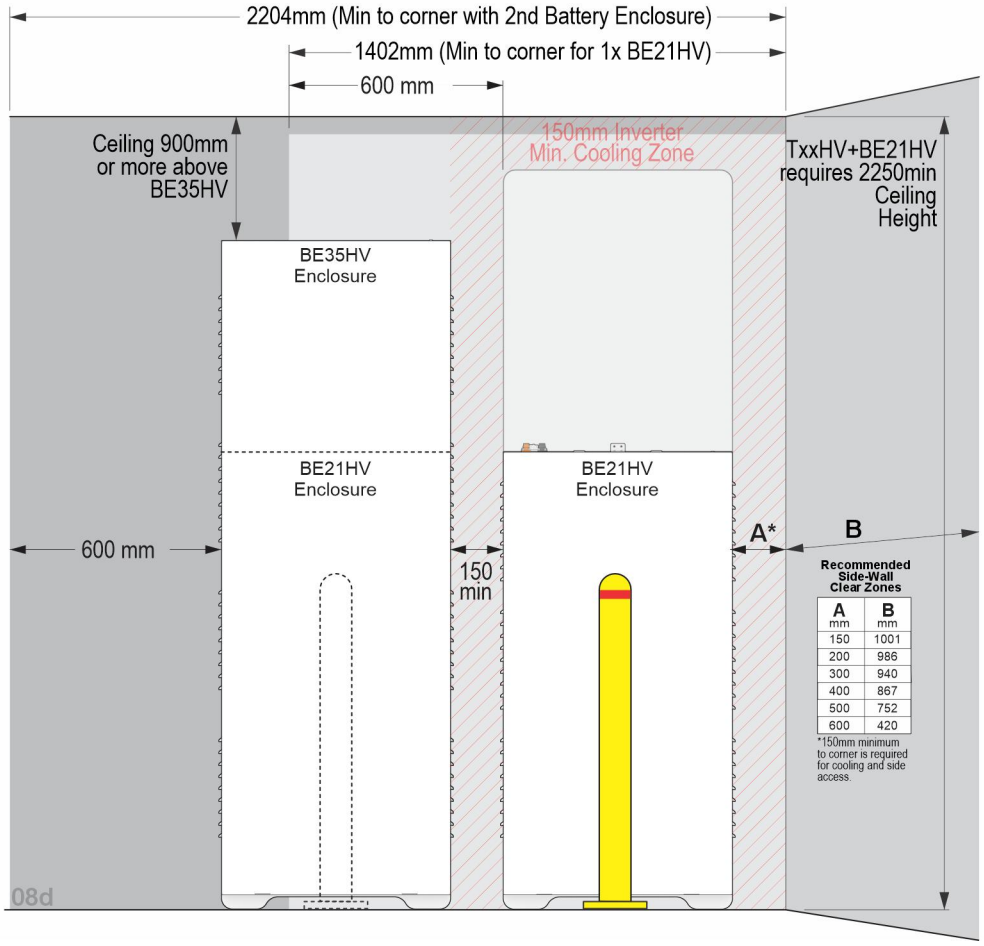

2.2.5. INSTALLATION ON A LOW, BLANK WALL (BE21HV + OPTIONAL BE)

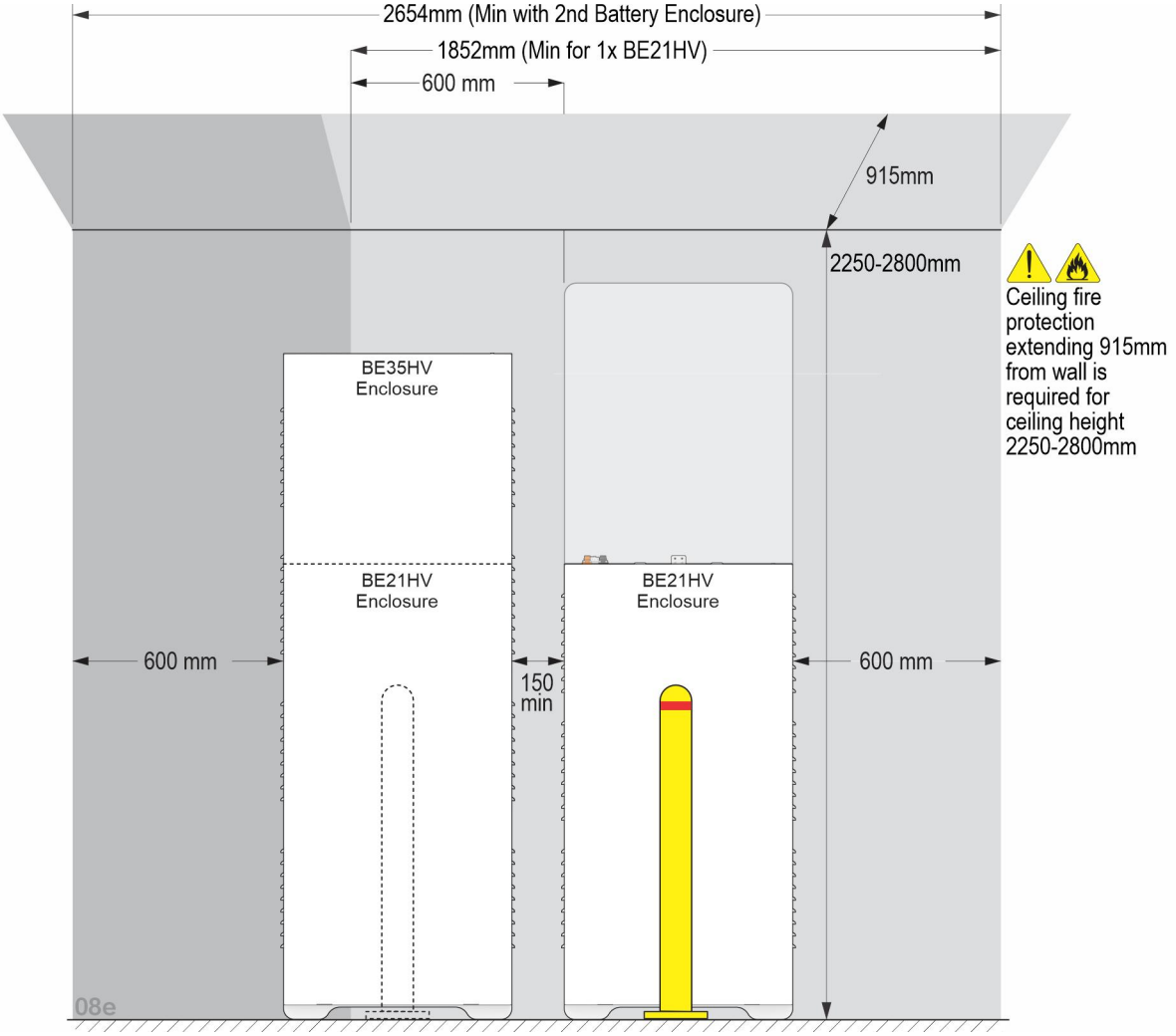

2.2.6. INSTALLATION NEAR A LOW CEILING CORNER (BE21HV + OPTIONAL BE)

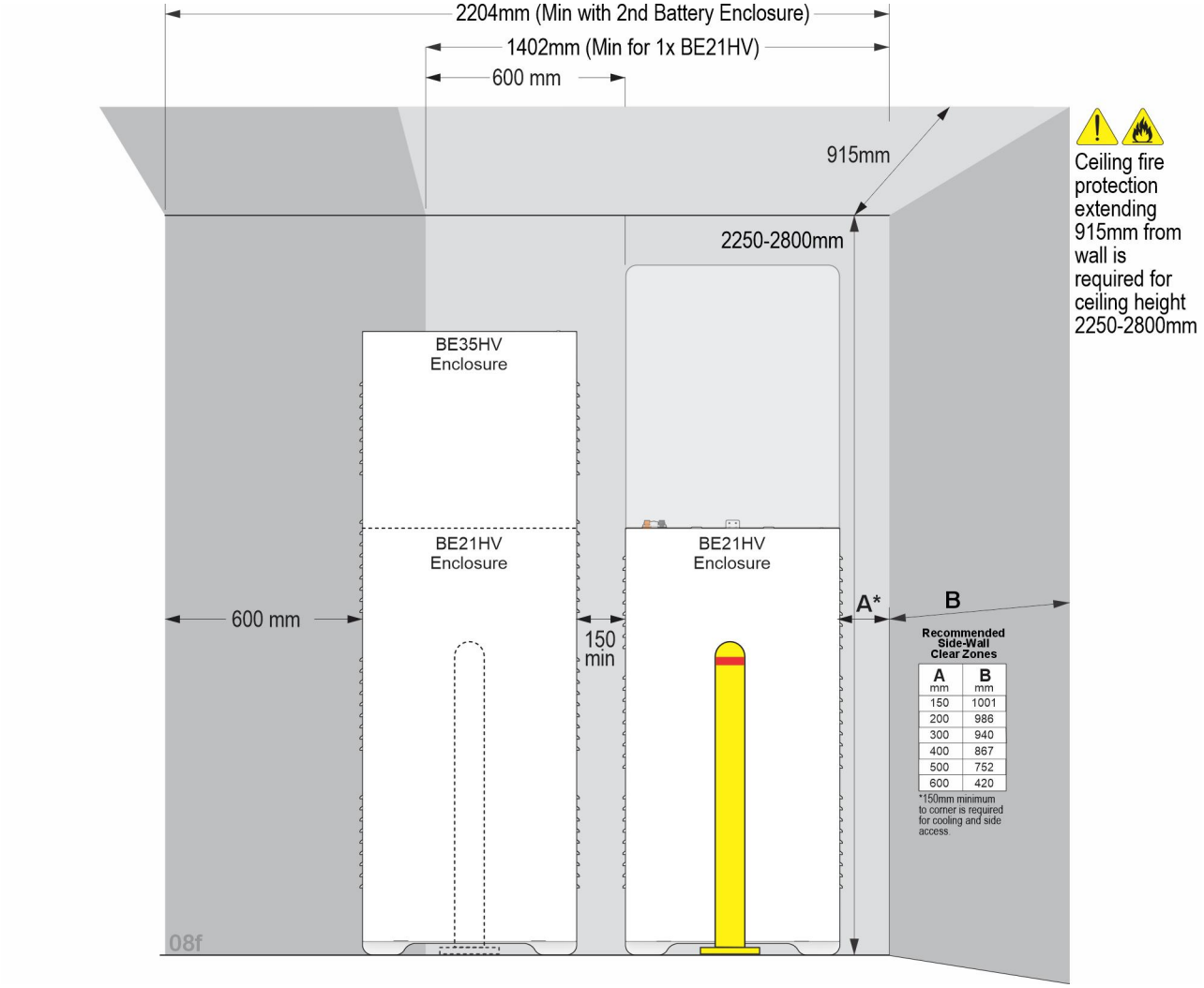

2.3. Preliminary electrical installation

2.3.1. OVERVIEW

The primary BE21HV Battery Enclosure is floor standing and mounted flush to the wall behind. The Wall Mounting Frame stands on the Battery Enclosure, is positioned using alignment pins, and is fastened to the wall through the screw plate. The Inverter is hung on the Wall Mounting Frame and stands on the Battery Enclosure. When installed, the Inverter side and top covers secure the Inverter to the Wall Mounting Frame and restrict access to the internal and external electrical and communications connections.

Secondary enclosures are installed separately and nearby to the TxxHV and BE21HV combination. Consult the documentation with the secondary enclosures.

It may be faster (but not essential) to run and terminate cables and conduits after fitting the Wall Mounting Frame and before hanging the inverter.

Ensure that the cable tails have generous bend radii, are long enough to reach the Inverter and form effective drip loops.

The Wall Mounting Frame has pass-throughs to accommodate rigid or flexible conduit up to 32mm diameter. Typical conduit routing options are shown below right. The Inverter side and top covers have matching breakouts.

2.3.2. RUNNING CABLES TO THE INVERTER

Run external cables to the Wall Mounting Frame before the inverter is installed.

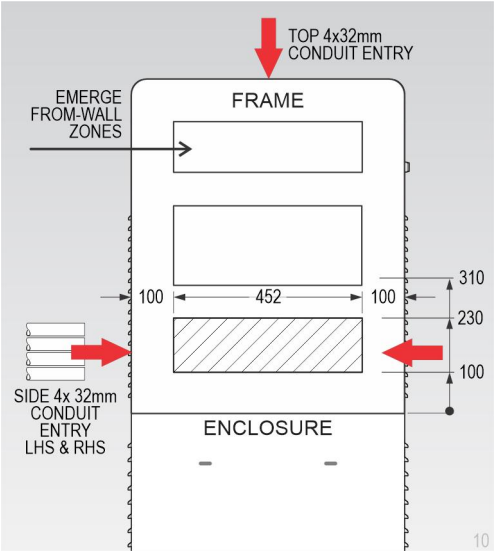

- 230V AC Grid Supply connection to main switchboard (MSB) or sub-board, using 3xL/N/E (Orange Circular AC cable preferred)
- Cable from Backup Circuit isolator (3xL/N/E).
- DC PV cables from the PV arrays.
- Cat 5 cable to Redback Energy Meter and DRED controller (usually at the MSB. A 10m terminated cable is supplied).
- Cat 5 cable to the local ethernet network (optional).

All cables must be run into the Wall Mounting Frame from:

- Behind, through the wall, using flexible conduit, and emerging through the middle or lowest windows on the screw plate.
- Top, using up to 32mm rigid or flexible conduit, or
- Left or right side, using up to 32mm rigid or flexible conduit.

There are reliefs in the wall mounting frame to pass conduits, and the side covers have breakouts.

At the inverter, cables must be terminated using the supplied plugs.

Plugs are connected after the inverter is installed. External connections are concealed by side panels attached to the inverter.

All connections between inverter and battery enclosure are external, using supplied cables, and are concealed when the inverter side covers are fitted.

2.4. Install the primary BE21HV Battery Enclosure

2.4.1. OVERVIEW

The enclosure houses the Battery Management System module and up to three P1-7000HV batteries.

The installation process is:

- Unpack enclosure from the shipping carton.
- Locate the accessories box.
- Remove front cover.
- Verify all parts have been supplied.
- Position the enclosure and fasten to wall.

WARNING TIPPING HAZARD. Keep children and animals out of the worksite. Do not leave the enclosure unattended during installation. Fasten enclosure to the wall as soon as practical.

WARNING: HEAVY LIFT- 42.6kg. The enclosure is heavy: 2-person lift needed.

Inspect all parts. Contact Redback if any part is damaged or missing.

2.4.2. PRE-ASSEMBLY

1. Open the BE21HV carton: locate and set aside the Packing List.
2. Remove the cabinet from the transport carton. Stand the cabinet on a protective surface. The Front Panel is retained by:
   - One M6x8 screw on each side
   - Two M6x8 screws and two bayonet clips on top
   - Concealed bayonets and receivers at the bottom edge
3. Remove the screws from the sides and top of the Front Panel.
4. To remove the Front Panel:
   a. Standing directly in front, use a flat-blade screwdriver or similar tool to depress each upper bayonet clip whilst gently pulling the front cover toward your body.
   b. When both clips are released, slowly pull the front cover toward you until you can see and feel the concealed lower bayonets and receivers.
   c. Lift the panel from the receivers. Set the front panel aside.
5. For transport, the BE-to-BMS cables are cable-tied to the inside top of the battery enclosure. Cut and remove the cable-ties to release the cables.
6. Open the accessories box. Cross check contents with the packing list and verify all parts are supplied. Contact Redback if any parts are missing or damaged.

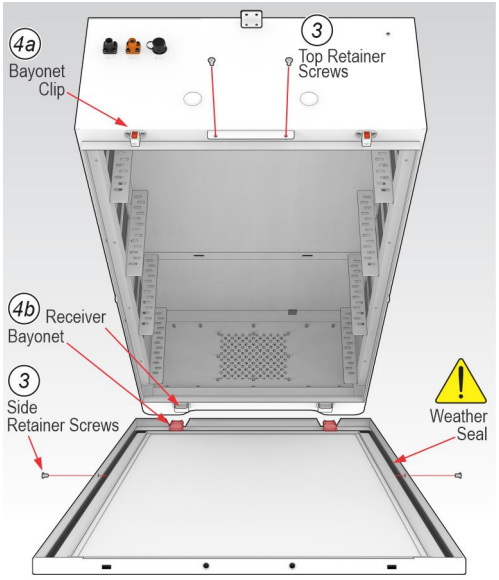

Battery Enclosure Front Cover Removal 11b

2.4.3. INSTALL THE BATTERY ENCLOSURE

WARNING: STRUCTURAL REQUIREMENTS!
The BE21 HV battery enclosure is a floor-standing design, attached to the wall behind to prevent toppling.
The wall should not carry the full weight of the enclosure: this should go vertically through the enclosure feet.
The wall and fasteners must be suitable to secure the hung weight of the Redback system and prevent toppling.
Please ensure that the selected wall is structural (e.g., solid brick) and you use at least four (4) suitable fasteners.

Installation notes

- The 21 HV Battery Enclosure is pre-wired for use with a Redback TxxHV inverter and a RED-P1-BMSHV.
- Stand the enclosure on a stable, level surface. Use packers under feet if needed.
- Fasten the enclosure to a flat, structurally sound wall. Waterproofing may be affected if the enclosure is twisted or damaged. Use packers if needed.
- The enclosure is convection cooled. Vents are located at the bottom and sides of the enclosure. Ensure 150mm clear space either side. Do not block the cooling intakes or exhaust vents.
- Ensure at least 900mm clear height is available above the enclosure (for inverter fitting and ventilation).

Installation process

1. Place the enclosure in the required location: on the floor; against the wall; 150mm clear space both sides.
2. Set the enclosure level. Use a spirit level as needed. Add packers under feet if necessary.
3. Check that the wall is flat. Use packers as needed to ensure the enclosure does not distort when fastened to the wall.
4. Four reinforced mounting points are provided, as shown at right. Drill additional 8mm holes if required.
5. Fix the enclosure to the wall using suitable fasteners up to diameter 7mm (installer to supply).
6. Seal around the fasteners and holes using the supplied sealant.
7. Preliminary installation is complete.

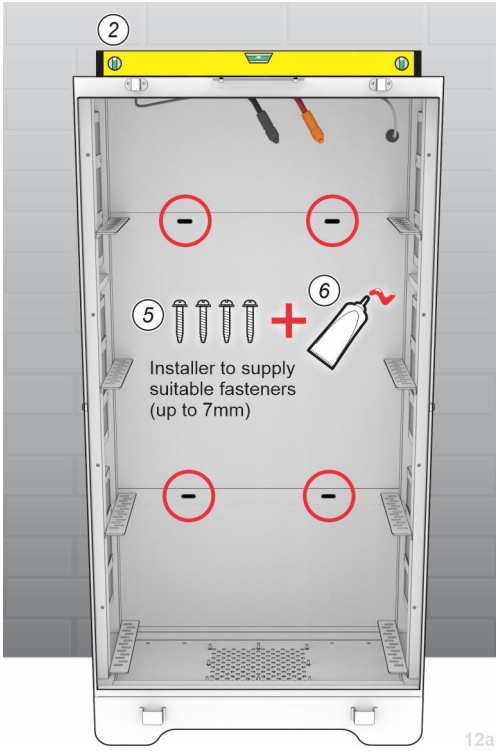

2.5. Installing a secondary battery enclosure

The TxxHV inverter can have a second battery enclosure connected. Two Redback enclosures are suitable for use as a secondary enclosure: RED–P1–BE21HV and RED–P1–BE35HV.

Connection kits are available for installing the secondary enclosure 150mm to the left or right of the TxxHV system.

If possible, install the secondary enclosure after the Inverter has been lifted into place. When the secondary enclosure is installed within 600mm of the main system it will impact the ease of lifting, positioning and installation of the inverter, which is very heavy.

If fabrication longer DC cables installers must select suitable wire size to account for voltage drops.

2.5.1. INSTALLING A BE21HV SECONDARY ENCLOSURE

A second BE21HV enclosure may be installed no less than 150mm to the left or right of the main system, to preserve the cooling space requirements.

To install the second BE21HV, follow the same procedure as in section 2.4.

To install the cables and ducts follow the instructions included in the connection kit.

2.5.2. INSTALLING A BE35HV SECONDARY ENCLOSURE

The BE35HV is very similar to the BE21HV except that:

- Is it 600mm taller.
- Holds 3–5 battery modules.
- Has four screws retaining the sides of the front panel
- Requires six wall fasteners

A BE35HV may be installed no closer than 150mm to the left or right of the main system.

Installation is the same process as for the BE21HV (section 2.4).

To install the cables and ducts follow the instructions included in the connection kit.

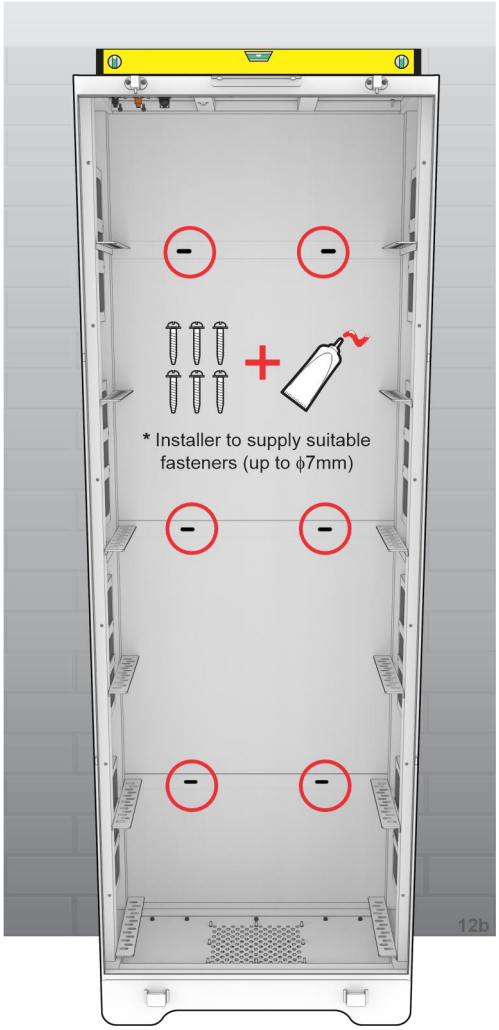

2.6. Prepare the TxxHV inverter for installation

Preliminary steps to inverter installation:

1. Open the inverter shipping carton.
2. Locate the Packing List and set aside.
3. Remove and inspect:
   a. Wall Mounting Frame
   b. Accessories Box
   c. Documents
   d. Meter Cable
   e. Top and Side Covers
   f. Inverter
4. Retrieve the Packing List and verify all parts are supplied. Contact Redback if any parts are missing or damaged.
5. Remove the inverter from the carton and lie on a stable surface.
6. Remove the Control Panel Cover. The cover is retained by magnets. Use moderate force and pull the cover directly away from the inverter.
7. At each side of the inverter, remove the Connector Covers and set aside. Each cover is retained by two screws on the front and one thumbscrew at rear.

WARNING: HEAVY LIFT– 65kg. The enclosure is heavy: 2–person lift needed.

Inspect all parts. Contact Redback if any part is damaged or missing.

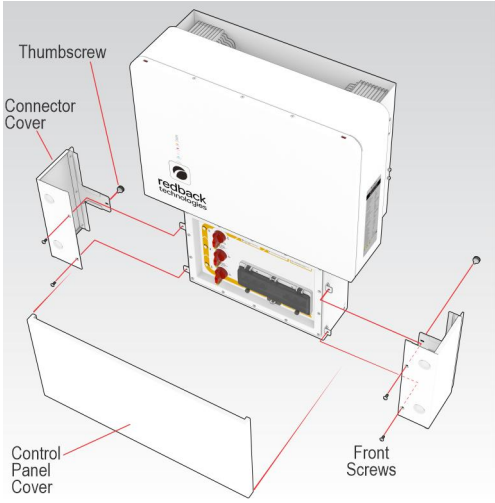

Remove inverter covers before installation 14a

2.7. Install the Inverter Wall Mounting Frame

WARNING: STRUCTURAL REQUIREMENTS!
The Redback System is a floor–standing design, attached to the wall behind to prevent toppling.
The Inverter and Wall Mounting Frame stand on top of the Battery Enclosure: the weight is transferred to the floor via the enclosure. Please ensure that the wall is structurally sound and use at least five (5) suitable fasteners.

Installation notes

- Install the Wall Mounting Frame correctly.
- The inverter is convection cooled: provide 150mm clearance to top and sides to ensure airflow.
- Stand the frame on top of the battery enclosure, centre aligned, using the guide pins.
- Fix in position, using suitable fasteners.
- Five fastener holes are provided. Choose fastener locations that will spread loads to the structural part of the wall. If necessary, drill new holes through the Wall Mounting Frame.
- Installer to select and supply suitable fasteners.

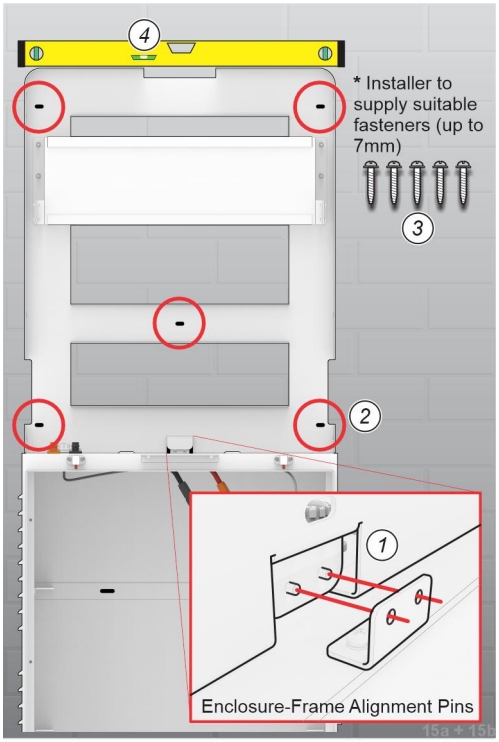

Fasten Mounting Frame to wall

Fasten the frame to the wall.

1. Set the Wall Mounting Frame on top of and centre aligned to the sides of the Enclosure.
2. Use the frame as a template for fasteners.
3. Loosely fix the enclosure to the wall using at least five (5) suitable fasteners.
4. Check the frame is level (use a spirit level) and centre aligned to the enclosure. Tighten the fasteners.

2.8. Install the inverter

1. With an assistant, lift the inverter onto the Wall Mounting Frame, and allow to rest on the BExxHV.
2. Ensure the upper hangers engage the wall mounting frame. When correct, the Inverter will sit vertically on top of the battery enclosure.
3. Install and tighten the four M4x10 security screws (two to each side).

   Note: The entire weight of the inverter is carried by the battery enclosure. The Wall Mounting Frame locates the inverter during installation, prevents toppling, and adds overall rigidity to the structure when the side and top covers are attached. It is not intended that the Wall Mounting Frame will ever carry the full weight of the inverter.

WARNING: HEAVY LIFT– 65kg.

The inverter is heavy: 2-person lift needed.

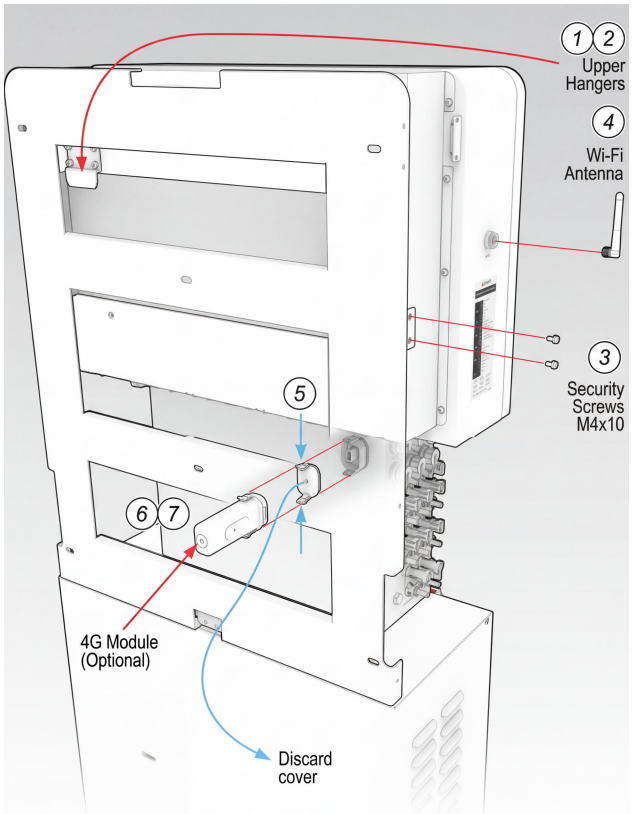

2.9. Antennas

2.9.1. WI-FI ANTENNA

4. Remove the dust cap. Screw in the supplied antenna at the location shown. Final antenna position should be pointing vertically upward.

2.9.2. 4G MODULE

4G network connection requires the optional 4G module.

To install the 4G module:

5. Identify the 4G socket cover at the left rear of the inverter. Squeeze the levers to disengage the hidden clips and remove the cover.
6. Align the 4G module to the socket with the logo and LED facing outward (toward you).
7. Firmly push the module into the socket until the clips engage. There should be no gap between the module and the socket. Ensure the module cannot be removed without releasing the clips.

2.10. Connect primary Battery Enclosure

The inverter and primary battery enclosure are connected internally using supplied cables.

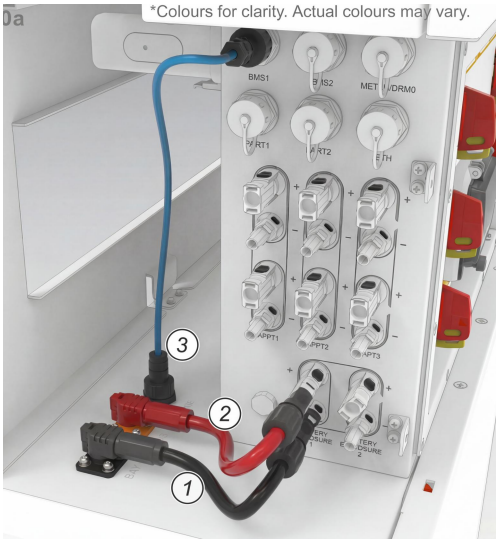

2.10.1. BATTERY DC POWER

Pre-terminated cables are supplied to pass DC power.

Working on the DC-side (left side) of the inverter:

1. Connect the red +VE cable as shown.
2. Connect the black –VE cable as shown.

Observe polarity: incorrect connection will cause damage to the system.

Notes:

- To achieve waterproofing, push the plugs fully into the sockets. They should not be removable without pressing the release button or using a release tool.
- To release the plugs:
  - At the battery Enclosure, press the button on the side of the plug, hold, and withdraw the plug from the socket. Rotating the plug may assist with overcoming resistance caused by the vacuum inside the plug.
  - At the inverter, insert a suitable tool into the slots until the bayonet retainers are pushed back and the plug can be withdrawn.

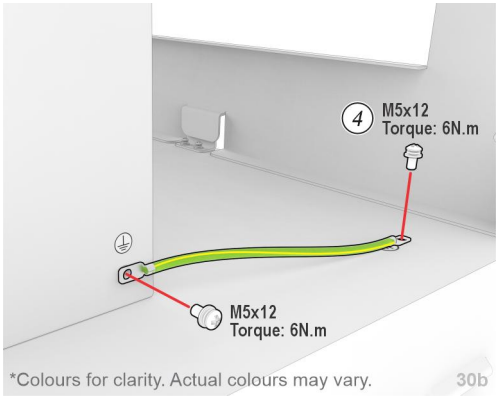

2.10.2. BMS

Working on the DC-side:

3. Connect the supplied BMS cable between inverter and battery enclosure as shown above right. Ensure the waterproof caps are installed correctly.

2.10.3. BATTERY SYSTEM EARTH

An earth connection is required between the Inverter and the Battery Enclosure. A terminated 8AWG cable is supplied for this purpose. It is retained by M5x12 screws.

Working on the AC-side (right side) of the inverter

4. Attach the supplied earth cable at the two points shown. Torque screws to 6N.m.

2.11. Connect a secondary battery enclosure

Connection of a secondary battery enclosure to the inverter uses the BMS2 port, and Battery Enclosure 2 DC connectors, as shown right.

2.12. Terminate and connect 230V AC Cables

Danger to persons and equipment. Ensure correct plugs are fitted to the Grid and Backup connection cables otherwise the system will be unexpectedly energized.	**Electrocution Hazard.** Lethal voltages may be present. Isolate all sources of power and test before starting work.	**Minimum Cable Size.** Installer to select cables according to AS3008.

2.12.1. ASSEMBLY NOTES

The Backup and Grid AC connect plugs are interchangeable. Take care to connect the plugs to the correct cable.

2.12.2. AC PLUG ASSEMBLY

Terminate and connect the Grid AC and Backup AC connectors as shown right, using the supplied plugs noting that one plug has a blue moulding. Use the "blue" plug for the Backup circuit plug.

Notes:

- Use the blue terminal molding for the Backup circuit.
- Installer to select cable sizes to suit the installation—following applicable wiring rules—and accounting for voltage drop.
- Permitted cable size is 8-14mm2 (6 8AWG).
- If required earth is greater than 14mm^2 add an auxiliary PE.

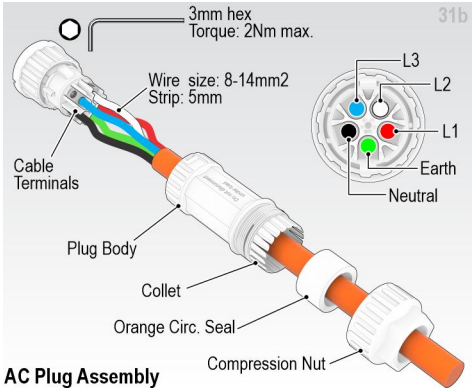

AC Plug Assembly

2.12.3. CONNECT AC CABLES TO THE INVERTER

At the AC-side, connect the AC cables to the inverter as shown right Ensure the correct Circuit is connected to the correct socket.

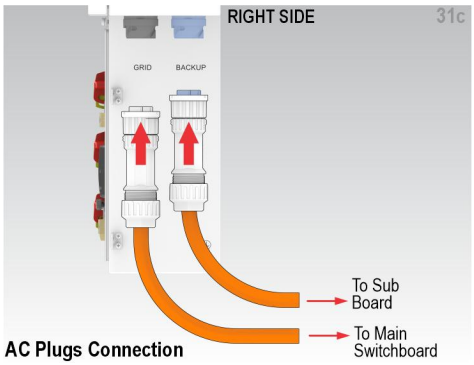

AC Plugs Connection

2.12.4. AT THE MAIN SWITCHBOARD AND OR BACKUP SUB-BOARD

Connect the Grid Supply and Backup cables as shown below, noting:

Installer to select cable sizes to suit the installation—following applicable wiring rules—and accounting for voltage drop.

• Internal connections are shown for information only. Installers do not usually access inside the Inverter.

• Inside the inverter, N and PE are not connected together. Although there is a relay between N and PE on the Backup port inside the inverter, this relay is prohibited in the Australian market. The N line of the Grid port and the N line of the Backup port are directly connected together.

• There is an RCD detection device inside the inverter, which can realize the detection function of the Grid port. The Backup port needs to install a Type B 30mA RCD device. The RCD parameters have been noted in the Manual.

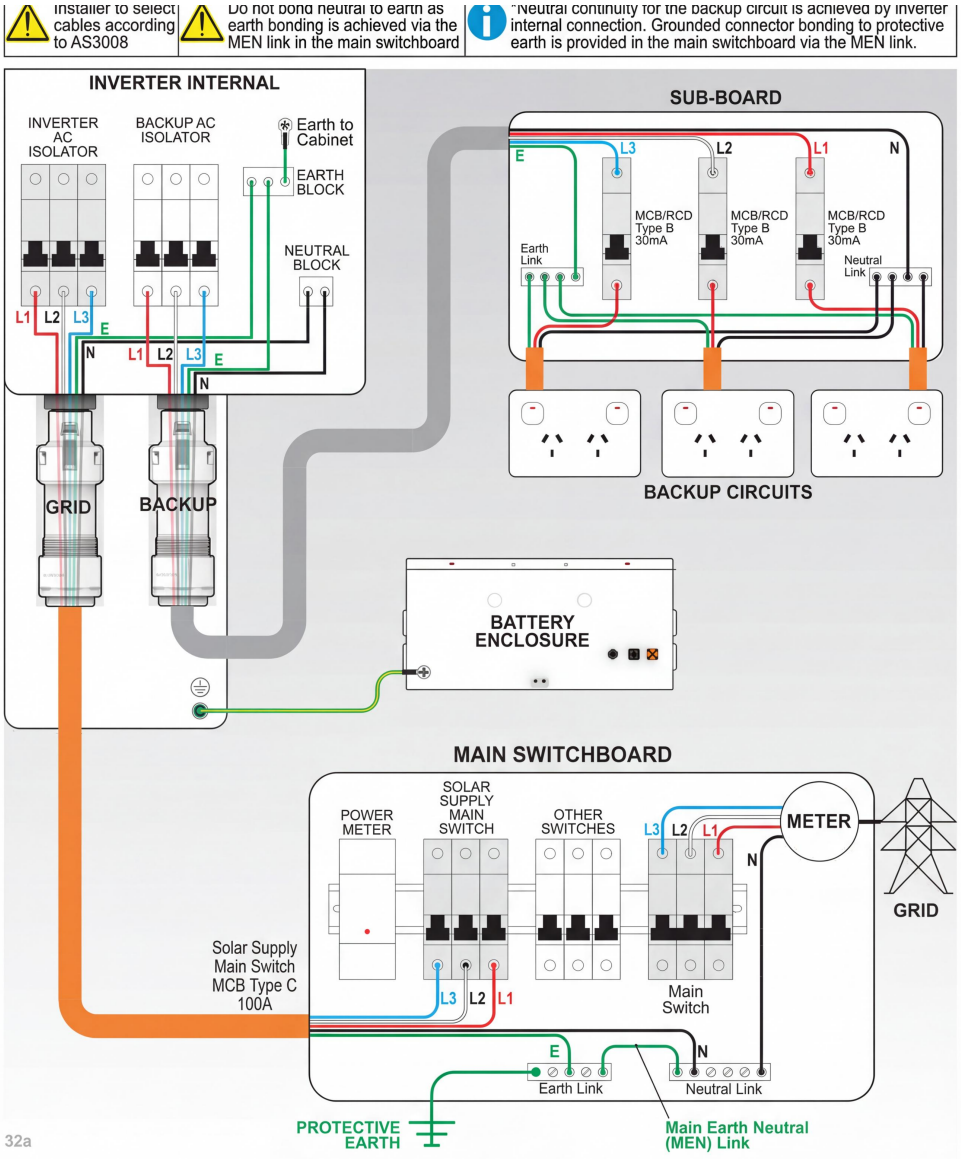

2.13. PV cables

ONLY USE THE SUPPLIED DEVALAN VP-D4B CONNECTORS. AS/NZS5033:2021 prohibits mixing of PV connector types and brands.

TEST POLARITY BEFORE CRIMPING PINS TO CABLE The crimping operation is not reversible. A mistake requires new connectors.

WARNING: PV ARRAY GROUNDING. The Redback system is a transformer-less design. PV arrays connected to this system must be grounded.

WARNING: SHOCK HAZARD. Solar arrays generate energy even in low light. Handle cables and connectors carefully to avoid shock or arcing.

WARNING: ELECTRICAL DAMAGE RISK. Solar arrays must be electrically isolated from each other:

- Do not bridge arrays.
- Do not bridge MPPTs
- Do not connect in parallel or serial.
- Do not share isolator switches.
- Do not connect or disconnect PV while the inverter is ON.

CAUTION: LIGHTNING PROTECTION. PV arrays in the system should be protected by a Lightning Protection System as described in AS/NZS5033:2021.

2.13.1. AT THE INVERTER

The TxxHV inverter accepts power from up to six PV strings, with one or two strings per MPPT.

Staübli PV-KBT4-6II-UR and PV-KST4-6II-UR MC4-style connectors are supplied for connecting PV to the inverter. These must be used. Contact Redback if additional plugs or pins are required.

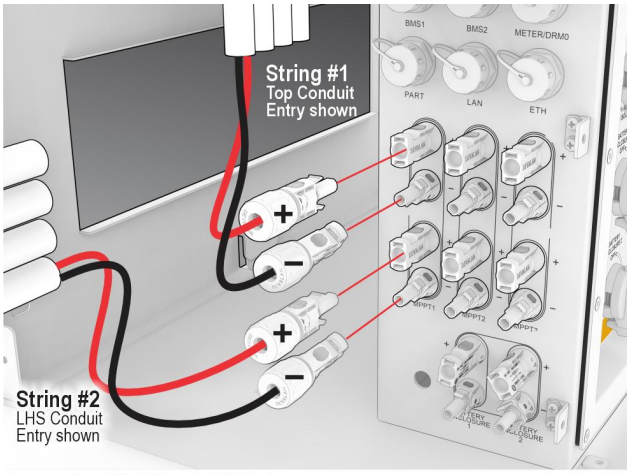

Connecting PV strings to MPPT1 35a

For all PV cables:

1. Run the DC cables from the PV arrays to the inverter DC side (left side)
2. Ensure sufficient cable is available to form drip loops.

For each PV cable:

3. Strip cable to bare 8mm of conductor.
4. Check polarity and identify its paired cable.
5. Crimp to secure cable to pin. Note: Longer pins are the positive terminations.
6. Push pin into plug assembly until a "Click!" is heard or felt.
7. Tighten the Sealing Nut
8. Push the entire plug assembly onto its matching socket until a "Click!" is heard or felt. Ensure the plugs are secure, and cables remain paired.
9. To release a plug, simultaneously pull on the plug and push the Release Tool into the slots indicated by the blue arrows.

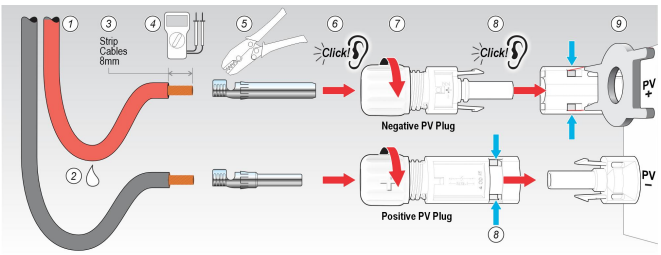

Assemble and connect PV cables 35b

2.14. Communications ports

2.14.1. OVERVIEW

The TxxHV inverter needs to communicate with the following devices or services:

- Local area network (LAN) (Ethernet recommended).
- BExxHV Battery Enclosures.
- Energy Meter (required).
- Relays (via the Energy Meter, if required).
- DRED (if required by DNSP).

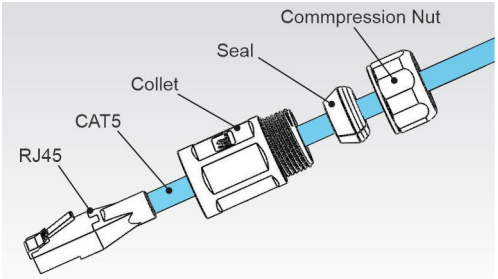

RJ45 Waterproof Connector Assembly 40a

Six waterproof RJ45 connections are provided on the left side of the inverter. The Energy Meter and DRED share one RJ45 connection and diverge at the main switchboard, using a splitter. All cables are Cat 5, and any extension or replacement cable must be Cat 5 and configured as straight-through.

The overall communications scheme is shown below.

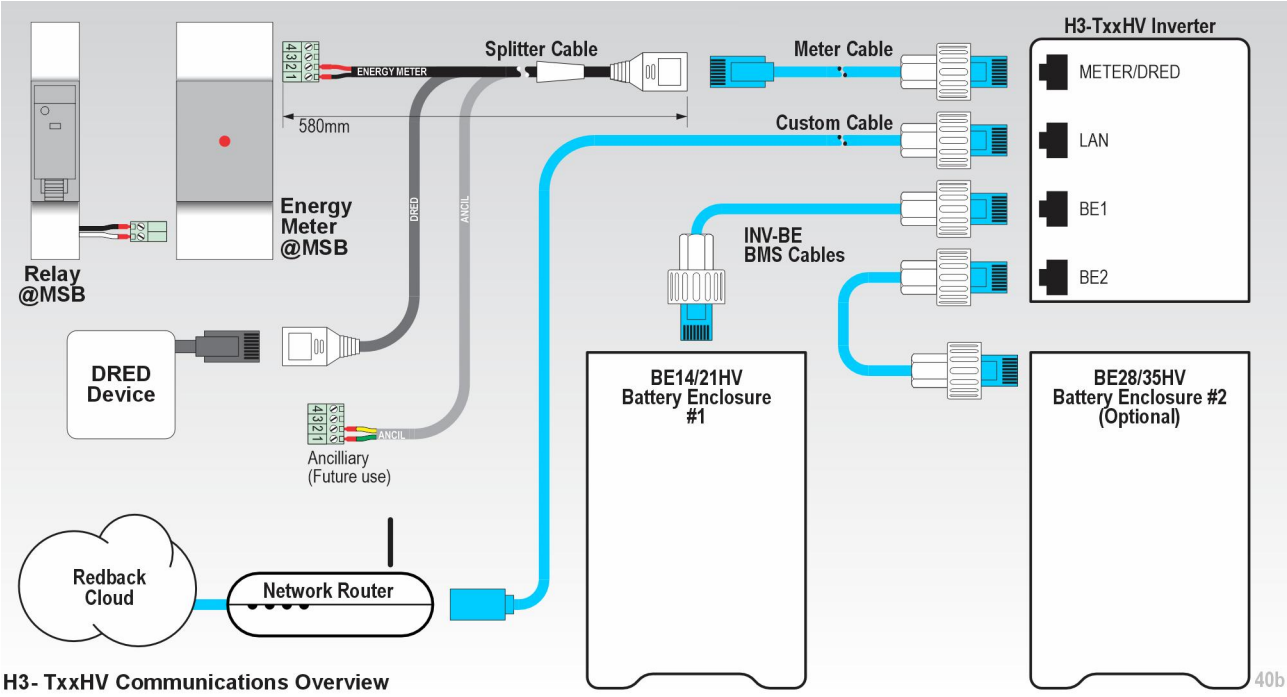

H3- TxxHV Communications Overview 40b

Extension or replacement cables must be CAT 5, configured straight-through. If required, longer, splitter-free, direct-to-energy-meter cables require cable assignments as shown below.

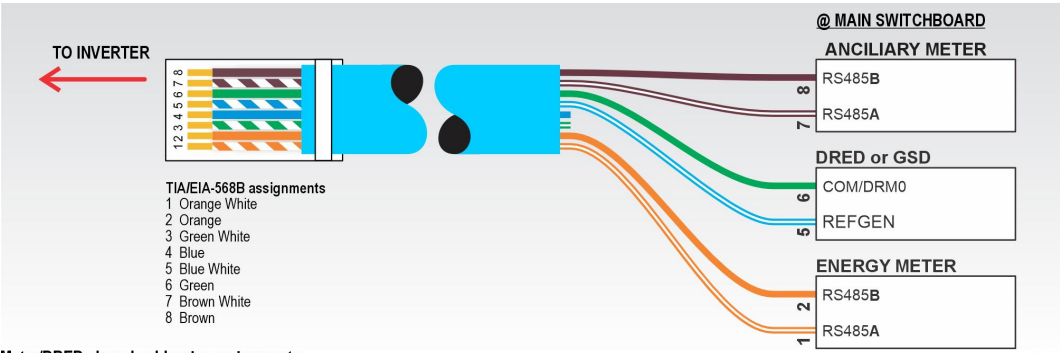

Meter/DRED shared cable wire assignments 40c

2.14.2. ETHERNET (RECOMMENDED)

The Ethernet port is used if the inverter is to be connected to the owner's network using ethernet cable (not Wi-Fi).

Ethernet is preferred as it is more reliable than Wi-Fi, and some Redback features such as Site Manager require ethernet connected inverters.

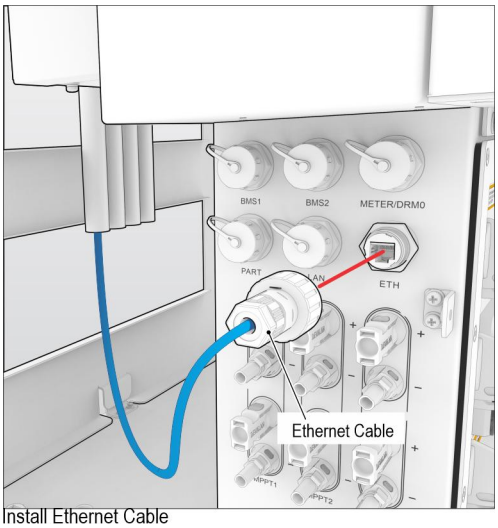

Install Ethernet Cable

Procedure

1. Run the ethernet cable to the inverter directly from the home's network router or a connected LAN port.
2. Terminate the LAN/Router end as RJ45 straight-through. Plug into the LAN or Router port.

At the inverter

3. Terminate at the inverter end using the supplied HDC-1i8m1 waterproof connector.
4. Configure the cable as RJ45, straight-through.
5. Connect to the ETHERNET port and tighten the waterproof cap.

2.14.3. ENERGY METER AND DRED

The Energy Meter and DRED share one RJ45 connection to the inverter. The Cat 5 cable carries both signals, and the wires diverge at the main switchboard, using the supplied splitter cable. The design of the splitter cable affords the location of the DRED device up to 1m from the Energy Meter.

For cable runs less than 10m

1. Run the supplied, pre-finished 10m cable from the inverter to the main switchboard.
2. Connect the Splitter Cable to the meter cable.
3. Run the tails to DRED, meter, or ancillary device, as needed.
4. Connect the meter to power and CT, as needed.

For cable runs longer than 10m

1. Run the necessary cable
2. At each end, terminate with HDC-1i8m1 plugs.
3. Configure the cable as straight-through.
4. Connect to the METER port and tighten the waterproof cap.
5. Run the tails to DRED, meter, or ancillary device, as needed.
6. Connect the meter to power and CT, as needed.

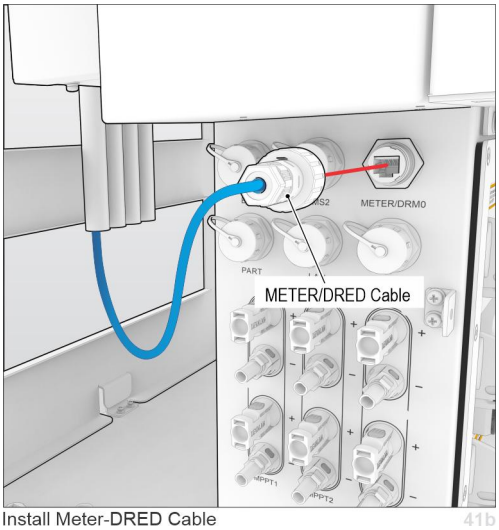

Install Meter-DRED Cable

2.15. DRED

The DRED device and the Energy Meter share one Cat 5 cable run to the main switchboard. The Cat 5 cable carries both signals, and the wires diverge at the main switchboard, using a splitter cable.

2.15.1. METHOD FOR ASSERTING DRM

MODE	RJ45 SOCKET ASSERT BY SHORTING PINS/WIRES		FUNCTION
DRM 0	6 (Cat 5 Green wire)	5 (Cat 5 Blue/White wire)	Operate the disconnection device

2.16. Install the Energy Meter & CTs

2.16.1. OVERVIEW

The inverter includes one Redback 3-phase PA300 or PM300 Energy Meter (hereafter called the Energy Meter) to measure the instantaneous voltage, current, power and energy of a 3-phase grid supply. The power data is transmitted to the Redback inverter where it is used to self-manage grid inputs from solar or battery power sources, and to control external devices such as relays.

The meter uses a non-intrusive, clip-on, "split core" type current transformer (CT).

WARNING. Connect the Energy Meter as shown in the following sections. If installing in a 3-phase environment, ensure that Current Transformers (CTs) and corresponding supply cables are connected to the same phase. Incorrect connection will cause incorrect data and may damage the meter.

The installation process is:

1. At the main switchboard, trace each phase to a circuit that can have a load added. Note the associated isolators.
2. Run the communication cable from inverter site or communications gateway to the main switchboard.
3. Install the energy meter in the meter box or suitable enclosure.
4. Connect the energy meter as shown on next pages.
5. Coil any excess cable neatly, and store.
6. Use RedbackINSTALL app check CT orientation.

2.16.2. ENERGY METER INSTALLATION NOTES

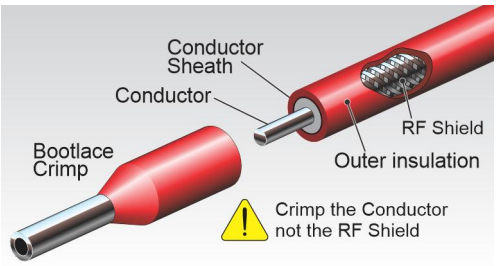

- The energy meter is not waterproof and must be mounted in a weatherproof location, preferably inside a meter box or dedicated enclosure.
- To ensure correct readings, ensure CTs are clipped onto the cables identified at step 1, above.
- The energy meter is DIN rail mounted, occupying 1x MCB space (18.5mm or 1-pole or 1-DIN slot).
- Install the energy meter such that all terminals are protected from accidental contact.
- All required plugs are supplied and are non-interchangeable Phoenix style connectors.
- Plug terminal screw torques: 0.2Nm maximum.
- The energy meter and CTs are a factory-calibrated assembly. Do not swap the CT with other products.
- The CTs have 1m cables that may be shortened or coiled as necessary.
- Bootlace crimping is recommended. When re-crimping, ensure only the conductor is crimped otherwise errors will occur. Ensure shortened cables are reconnected to the same positions on the plug.

2.16.3. EENERGY METER PRODUCT INFORMATION

2.16.3.1. Parts and dimensions

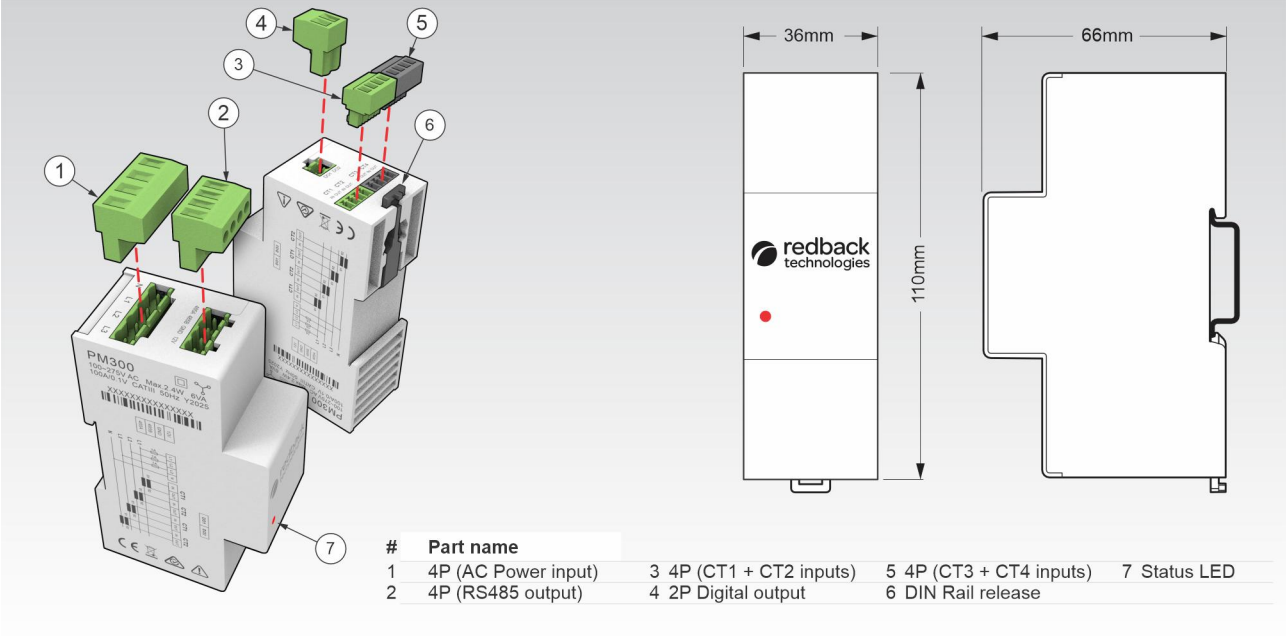

#	Part name			
1	4P (AC Power input)	3 4P (CT1 + CT2 inputs)	5 4P (CT3 + CT4 inputs)	7 Status LED
2	4P (RS485 output)	4 2P Digital output	6 DIN Rail release	

2.16.3.2.16mm/100A Current Transformers (CTs)

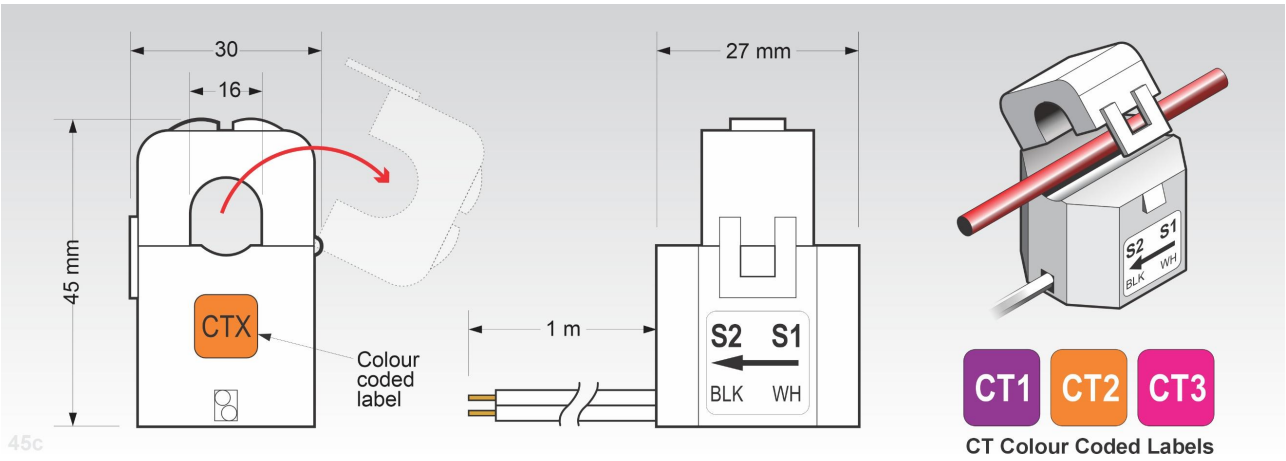

2.16.4. INSTALLATION PROCESS- ENERGY METER

1. Inspect the installation location. Identify a mounting point for the meter, supply power take-off points, and CT attachment points.
2. Mount the meter to an available DIN Rail location. The energy meter may be mounted adjacent to other devices.

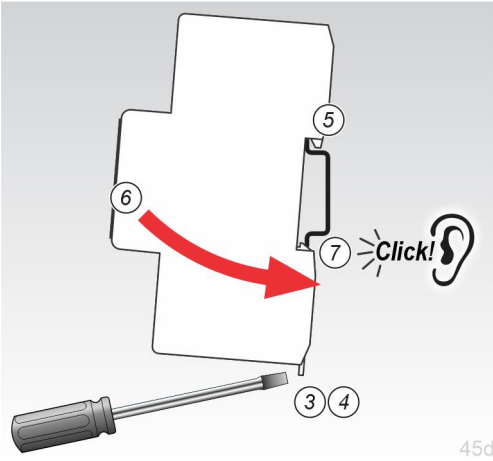

To mount the meter on a DIN rail:

3. Press the unlock lever.
4. Release the clip.
5. Hook the meter onto DIN rail
6. Rotate so that the meter body is flush against the rail.
7. Push clip up until there is a "Click!".

2.16.5. INSTALLATION PROCESS- CTS

1. Connect the CTs to the energy meter as shown in the following section. Terminal screw torque is 0.2N.m maximum.

2. Attach the CTs to 3-Phase wires as shown in the following section. To ensure correct readings, ensure CTs are clipped on as specified in the following Standalone or AC-coupled configuration diagrams. Note the colour coding.

CT connection notes

- Only use the supplied CTs.
- Ensure the CTs are rated for your application.
- Connect wires to the meter before attaching CTs. Conversely, detach CTs before releasing wires from the meter. This protects against accidental shock from an excited CT.
- Attach CTs in the directions shown at right. The current direction must follow Y←X marked on CTs: this is often embossed in the cable channel.

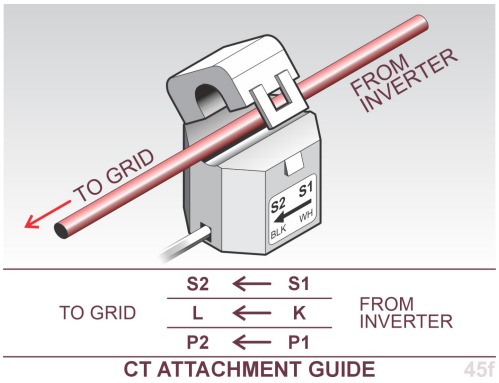

- CTs are fragile: Handle with care especially if working in a confined space.

2.16.6. INDEPENDENT INSTALLATIONS

Note: Follow these instructions when the Redback is the only inverter at the site.

The power meter measures the instantaneous voltage, current, power and energy of one phase of a grid supply system. The power data is transmitted to the Redback inverter and used to manage grid inputs from solar or battery power sources.

Connect to the meter as shown below.

1. To ensure correct readings, ensure CT1 is clipped onto L as shown below.
2. Terminal screw torque: 0.2Nm maximum.
3. Protect ends of any unused wires.
4. Use RedbackINSTALL app check CT orientation.

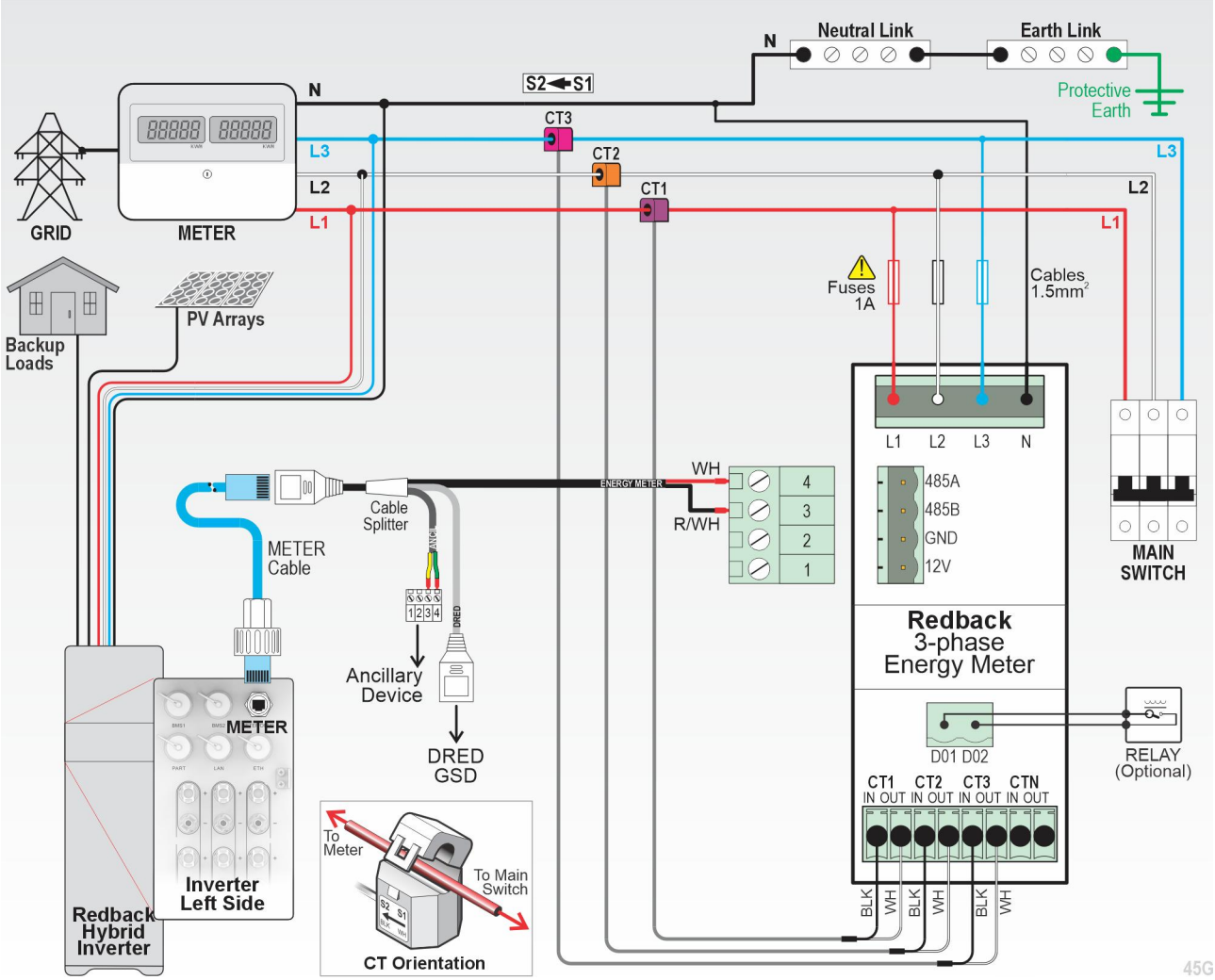

2.16.7. AC-COUPLED INSTALLATIONS

TxxHV inverters may be fitted to an existing grid-connected system in an AC-Coupled configuration—the Redback system can charge its battery using excess power from the grid-connected inverter.

The meter connection scheme is the same as shown on the previous page.

Limitation

The Redback system will work as an AC-coupled system but the Redback Meter is unable to monitor the true output of the 3rd party inverter- therefore the true house load cannot be calculated, and the power flows indicated on the app or portal are not correct.

2.16.8. SMART LOAD CONTROL

Smart Load Control requires:

- A compatible Redback inverter (hardware and firmware).
- A compatible Redback Power installed in the main switch board (a meter is supplied with the inverter).
- A relay or contactor rated to switch the desired load (supplied by installer).

Download the complete Smart Load Control Installation Guide at redback.link/rbslc

Overview

Redback's Smart Load Control feature enables owners to make the most of their generated energy by only operating their large loads (such as a hot water system) when there is excess solar energy available.

Smart Load Control aims to:

- Run the load using only excess PV energy.
- Avoid switching the load excessively (e.g., when a cloud passes in front of the sun temporarily reducing PV output).
- Optionally, the system will ensure that the load runs for a nominated number of hours each day. This is useful for equipment like pool pumps which require a minimum daily run-time.

The Smart Load Control feature is available on all TxxHV inverters. The Redback Power Meter uses an internal dry contact to activate the relay, which controls the load. The inverter controls the meter using RS485.

A typical connection scheme is shown below.

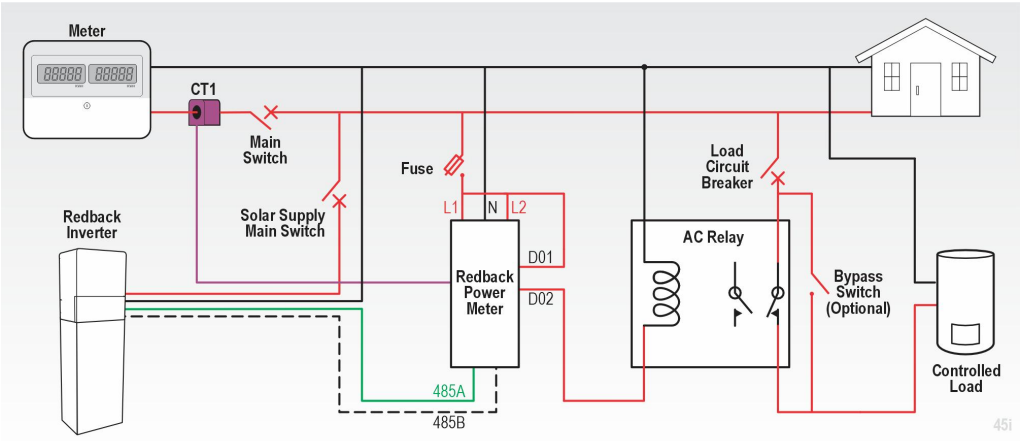

3. Battery Installation

3.1. Overview

The Redback entry–level system has a storage capacity of 14 or 21 kWh using two or three Redback RED-P1-7000HV battery modules.

Secondary battery enclosures have a storage capacity of 21, 28 or 35kWh using 3–5 battery modules. The Battery installation process for secondary enclosures is like the primary enclosure.

The BExxHV includes support rails for each BMS module and battery.

The battery and BMS modules are like 19” rack modules, with front-mounted push/pull handles.

The batteries are heavy– do not use the front handles for lifting. The batteries have top–mounted flip–up handles for lifting.

During installation, build the battery stack up from the lowest battery; insert the BMS module; ground the BMS and Batteries to the enclosure; and connect cables last. This provides the best visibility as you work.

Batteries are connected in series.

WARNING: SHOCK HAZARD. New batteries have some charge. Turn the Battery System DC isolator OFF during installation. Do not activate batteries during physical installation.

INFORMATION FOR FUTURE USE. When replacing or adding batteries, all batteries must be charge-balanced and battery firmware must be updated, otherwise performance will be affected.

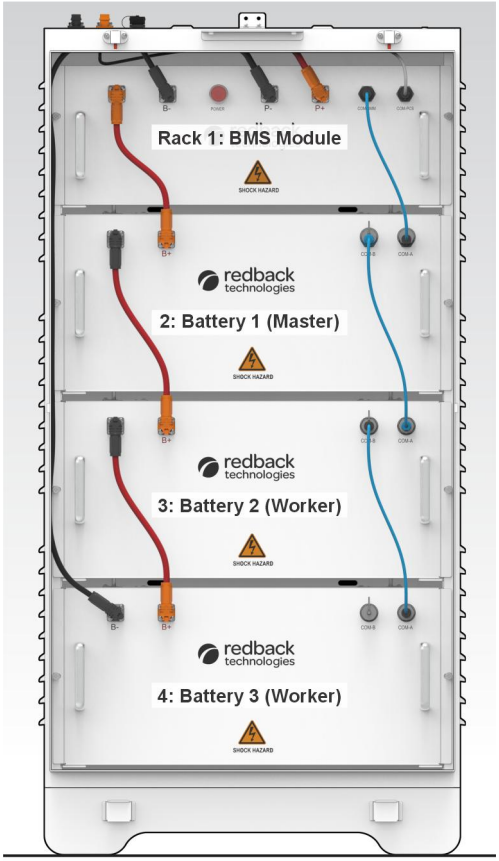

Battery Enclosure internal layout 50a

3.2. Allowable battery combinations and storage capacities

The battery stack requires a separate Battery Management System (BMS) to manage ultimate charge and discharge rates (protecting the batteries from heat damage) and to inform the Redback system of battery stack status.

The BMS also protects the batteries from total discharge, improving system reliability and longevity. The BMS module occupies the topmost position inside the battery enclosure (rack 1).

Batteries are identified as Master, 2, 3, 4 and 5. This refers to the position of individual batteries in the BMS chain of command, where the first connected battery is the Master battery, and the “workers” are batteries 2 and 3.

The battery identity also indicates the physical position of the battery in the battery stack, as shown right, where battery “X’ is installed in rack “X+1”.

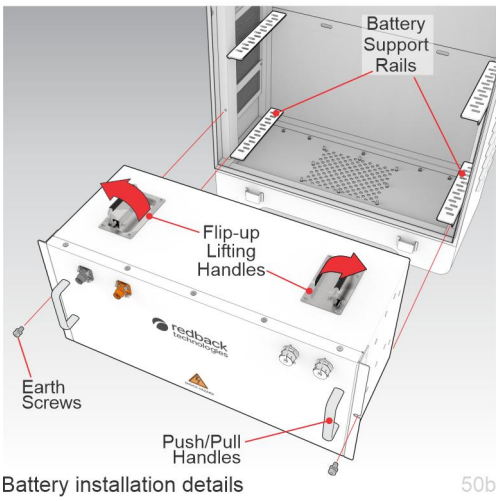

Battery installation details 50b

Number of 7000HV batteries	Nominal Capacity (kWh)●
0	0
1	♦
2	14
3	21
4	28⊠
5	35⊠

●Usable capacity is typically 95% of total capacity. ♦Single battery configurations are not permitted: they do not generate sufficient starting voltage. ⊠BE28HV and BE35HV only.

3.3. Stacking the batteries and BMS module

Note: The illustrations right show BE21HV. Reduce or increase the connections and cables used according to the number of battery modules being installed.

1. Unpack each module and inspect. Do not install any module that appears damaged. Contact Redback immediately for advice.
2. With an assistant, slide the “last” battery into the correct rack e.g. in a three-battery configuration, battery 1 goes into rack 2.
3. zWorking upwards, complete the battery stack.
4. zSlide the BMS module into rack 1.
5. Ensure all modules are fully inserted into the rack. Ground both sides of each module using the M6x12 screws supplied. Torque all grounding screws to 9.5 N.m.

	WARNING: HEAVY LIFT– 62kg. The batteries are heavy: 2–person lift needed.
	Tip: Rack the lowest battery first, then complete the battery stack. This provides the best visibility of the workspace.
	Batteries and BMS module must be grounded to the rack at both sides.

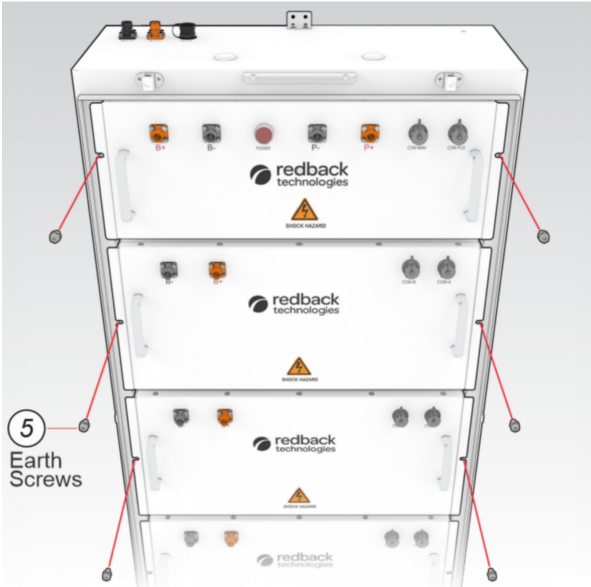

Stacking the batteries and BMS module

3.4. Connect Battery Enclosure to BMS module

The BE-BMS cables are pre-fitted to the inside top of the Battery Enclosure.

6. If not already done, cut the cable ties and release the cables,
7. Connect the orange and black DC cables to the P+ and P- sockets. Note: observe polarity.
8. Connect the BMS cable to the COM-PCS socket.

Note:The top cable and communication cable of the battery cabinet have been installed in the battery cabinet in advance. If there is any damage, the wiring harness needs to be replaced. Please follow the steps below to complete the replacement.

1. Pull the communication line down.
2. Use a tool to loosen the M5 × 10 screws and remove the positive cable.
3. Use a tool to loosen the M5 × 10 screws and remove the negative cable.
4. Align the negative cable with the negative socket bolt hole, tighten the M5 × 10 bolt with a tool, and the torque is 3.2N.m.
5. Align the positive cable with the positive socket bolt hole, tighten the M5 × 10 bolt with a tool, and the torque is 3.2N.m.
6. Plug the communication line up to the corresponding socket.

Connect Battery Enclosure to BMS module

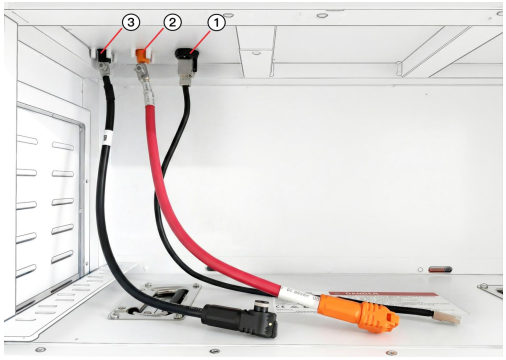

3.5. Connect BMS to Battery Stack

9. Connect the DC cables (A,B) as shown right, noting that Cable B goes to the last battery.
10. Connect the BMS cables (C) as shown right.

The cables to be connected are:

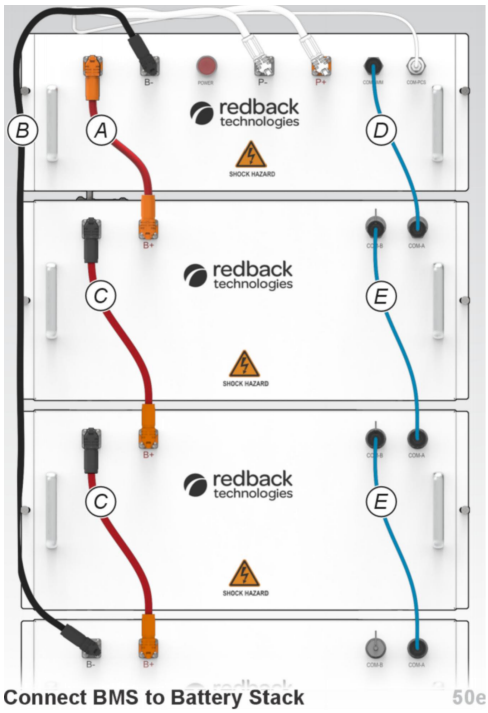

Connect BMS to Battery Stack

CABLE	DESCRIPTION	LENGTH	PORT	→	PORT
A	DC: BMS to Master Battery	275 mm	B+	→	B+
B	DC: Last Battery to BMS	1170 mm	B–	→	B–
C	DC: Battery to battery	325 mm	B–	→	B+
D	BMS: BMS module to battery	375 mm	COM–BMM	→	COM–A
E	BMS: Battery to battery	375 mm	COM–B	→	COM–A

Batteries are DC connected in series using cables terminated with industry standard push-in plugs.

Each battery has one positive and one negative plug socket.

To release a plug, press the button on the end of the plug, hold, and withdraw the plug from the socket. Rotating the plug may assist with overcoming any internal resistance.

4. Commissioning

4.1. Overview

The system commissioning process is:

- Register the installation on the Redback Portal at redback.link/register (+Add device).
- Start the batteries.
- Start the inverter.
- Onboard the inverter and initialise settings.

4.2. Commission batteries

STEP	PROCEDURE	ILLUSTRATION
1	**At the inverter Control Panel,** Turn the BATTERY DC isolators OFF (anticlockwise).	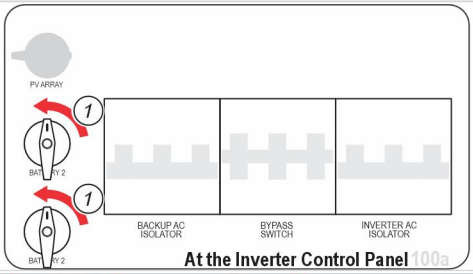 At the Inverter Control Panel 100a
2 3	**At the BMS module:** Press and hold the Power button until the LED starts flashing GREEN. Wait: the LED will flash Red/Green while the self-check is in progress. • The LED will be Green ON if no faults are detected and the internal relays will activate, connecting the battery stack to the BMS module. • The LED will change to Red if a BMS fault is detected. • If a battery fault is detected, the LED will display RED and the BMS will automatically turn OFF.	 100b
4 5	**Install the front panel:** a.Standing directly in front.Align the bayonets on the panel with the cabinet receivers and insert it. b.Press the panel from bottom to top to align the panel bolt hole with the cabinet body bolt hole. Gently tap the each upper bayonet clip buckle to lock it. Fix the top and sides of the panel with M6 * 8 screws at a torque of 7.5 N.m.	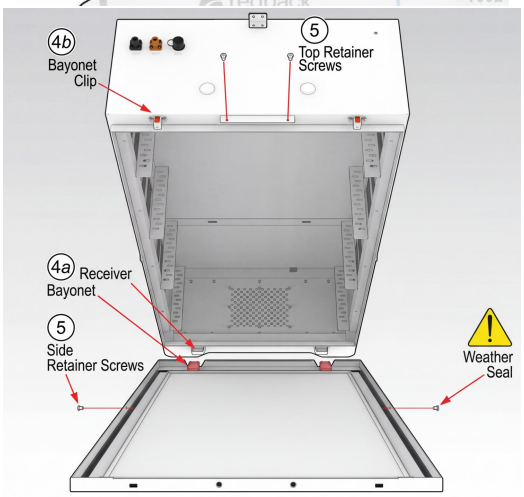 Battery Enclosure Front Cover Installation 11b

4.3. Inverter start-up

4.3.1. INVERTER START-UP NOTES

- The inverter requires about 1 minute to boot-up and start advertising Bluetooth (NETWORK LED is Blue, flashing).
- Ethernet connected systems will automatically connect to the internet, if available, indicated by the ETHERNET LED being continuously ON.

- Do not turn power OFF during start–up. This will delay start–up or may crash the system.

4.3.2. INVERTER START-UP PROCEDURE

STEP	PROCEDURE	ILLUSTRATION
1	At the main switchboard, turn the Solar Supply Main Switch ON (Up)	At Main Switchboard 110a
	At the inverter Control Panel:	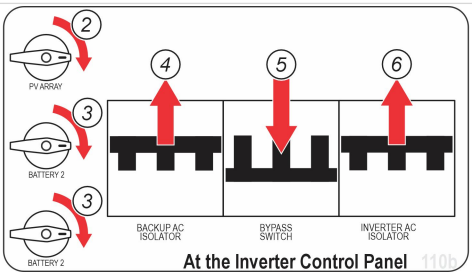 At the Inverter Control Panel 110b
2	Turn the PV ARRAY DC isolator ON (clockwise to 3 o'clock)	
3	Turn the BATTERY SYSTEM DC isolators ON (clockwise)	
4	Switch the BACKUP AC isolator ON (up)	
5	Switch the BYPASS to Backup (down)	
6	Switch the INVERTER AC isolator ON (up)	

4.4. Onboard the inverter

Onboarding is the process of setting up the inverter's permanent connection to the internet, using the owner's network. Permanent connection to the network is by Ethernet cable or Wi-Fi.

Onboarding is automatic when an ethernet cable is used.

When connection to the network is by Wi–Fi, complete onboarding using the RedbackINSTALL app and a Bluetooth connection to the inverter.

Before attempting onboarding, ensure all cables are correctly installed.

Installation cannot be completed without an internet connection.

The owner must maintain a stable* connection to the Redback Cloud otherwise warranty support will be affected.

** Excluding internet or power outages beyond the owner's control. Ethernet LAN connection and connection of internet hardware to a backup circuit is recommended.*

4.4.1. CONNECTION NOTES (TO OWNER'S INVERTER)

METHO	COMMENT	LED INDICATIONS	REDBACKINSTALL IMPACT
Ethernet	Preferred and automatic if LAN is detected	75a ETHERNET + NETWORK: ETHERNET is White, ON continuously, and NETWORK is White, ON continuously: Inverter is onboarded and connected to the Redback Cloud.	The app will request confirmation that LAN is the preferred connection method.
		75b ETHERNET + NETWORK: ETHERNET White, ON continuously, and NETWORK Orange, ON continuously: Connected to owner's network using ethernet but Redback Cloud not found. See 6.2 Troubleshooting.	
		75c ETHERNET + NETWORK: ETHERNET White, ON continuously, and NETWORK Blue, Flashing: Ethernet connected to owner's network, and inverter is advertising Bluetooth.	
		75d ETHERNET: ETHERNET LED OFF: Ethernet is not connected to owner's network. Onboarding required.	The app requires selection of the connection method.
Wi–Fi	Onboard using Bluetooth and Wi–Fi	75e NETWORK: The NETWORK LED must be Blue and flashing, indicating Bluetooth is advertising.	Connection to owner's network is needed, including password.
		75e NETWORK: Time is of the essence! Bluetooth onboarding must start within 30 minutes.	If necessary, the Bluetooth advertising can be restarted by cycling the inverter off and on (see section 5.3).
		75e NETWORK: Unable to connect message	Ensure Password is correct, and that connection is to a 2.4Ghz network (5Ghz is not supported).
None	Use "none" only if a permanent internet connection is not available immediately after commissioning. Warranty support may be affected if the system is not provided with a stable internet connection.		Commission using your phone, tablet or laptop's Wi–Fi hotspot. Set method to None after commissioning is complete.

4.4.2.CONNECT REDBACKINSTALL TO THE INVERTER

The RedbackINSTALL app requires little guidance, and there is in–app information.

STEP	PROCEDURE	ILLUSTRATION
1	Identify the inverter serial number. The serial number is found at the bottom of the specifications label located on the right side of the inverter.	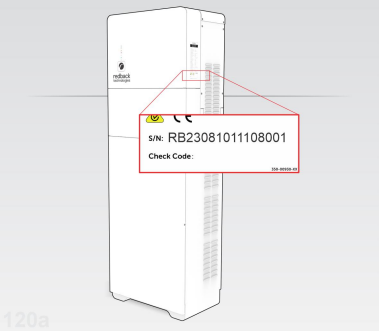
2	Ensure the NETWORK LED is Blue, flashing, indicating that Bluetooth is available. If not flashing, restart the inverter (see section 5.3).	
3	Open RedbackINSTALL and login. RedbackINSTALL will scan for products advertising Bluetooth. Wait up to five minutes.	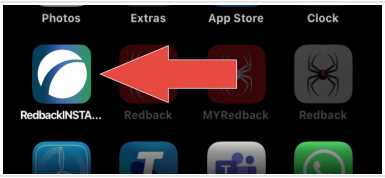
4	A list of nearby, Bluetooth advertising Redback inverters will appear. Tap the required RBxxxxxxxxxxxx number to continue. For easiest onboarding, turn all other non–onboarded systems OFF.The app will then display a list containing only one serial number.	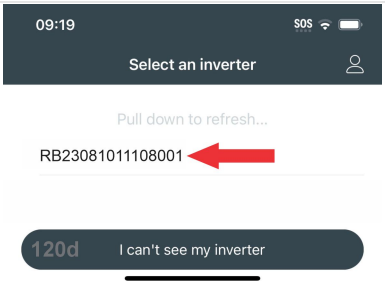
5	Wait up to two minutes for the Bluetooth connection to complete.	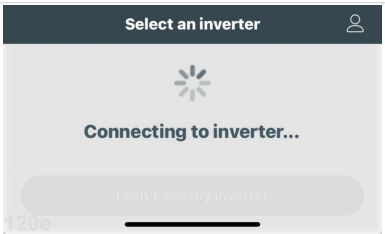
6	A success message will appear showing the inverter serial number of the inverter. Confirm the serial number matches that on the inverter specifications label on the left side of the inverter. Tap **Continue** to continue onboarding.	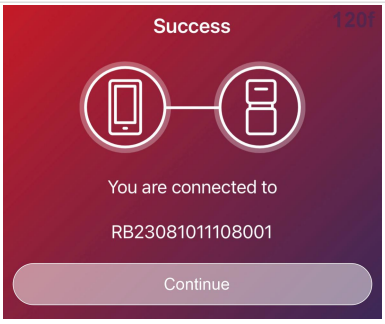

4.4.3.ONBOARDING (CONNECT TO THE LOCAL NETWORK)

RedbackINSTALL will advance to this stage after establishing a Bluetooth connection to the Inverter.

> This equipment is not compatible with 5Ghz Wi-Fi network or hotspots. Connect to 2.4Ghz networks only.

Note: if a local network is not available it is possible to temporarily connect the Inverter to a Wi–Fi hotspot, such as your phone. This is useful for configuration but is not an acceptable long–term solution.

STEP	PROCEDURE	ILLUSTRATION
1	**Select** the preferred method to connect to the local network and internet. Options are: • LAN (must be hardwired, will connect automatically) • Wi–Fi (usually requires network name and password) • None is not a valid option for onboarding. Commissioning cannot be completed. Use a Wi–fi Hotspot if neither ethernet nor permanent internet connection are available.	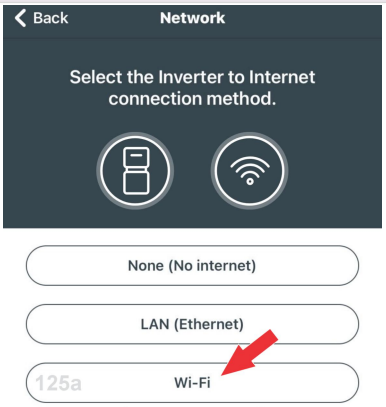
2	**Select** the required network or swipe down to refresh the list.	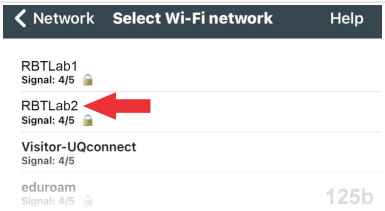
3	Enter the password. Tap **Connect** to continue.	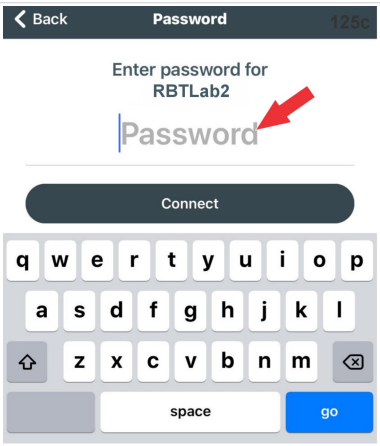
4	A Success message will appear. Tap **Continue** to go to the Inverter Configuration page.	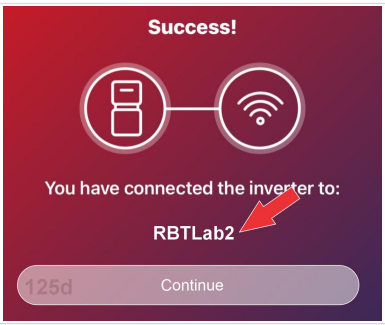

4.5. Notes on Regional Safety Settings

Regional Safety Setting is a mandatory choice when configuring the system—the system will not operate if it is not selected.

You may be prompted to update the inverter software. Do this if asked.

For convenience the Regional Safety Settings are set by selecting the Region from the list provided in the RedbackINSTALL app. The list is maintained with the latest settings required by AS4777.2:2020. Selection of a region automatically selects Power Quality Response Mode settings, including:

INFORMATION. The local grid operator may request a non–standard safety setting for an installation. To adjust power quality response mode setpoints from default values please contact Redback Technical Support.

- Voltage balance mode (where available)
- Voltage and frequency limits
- Sustained operation for frequency variations.
- Voltage Disturbance Withstand
- Grid Protection
- Power Rate Limits
- Frequency Response Limits
- Volt–Var response
- Volt–Watt response
- Fixed Power Factor Mode
- Reactive Power mode

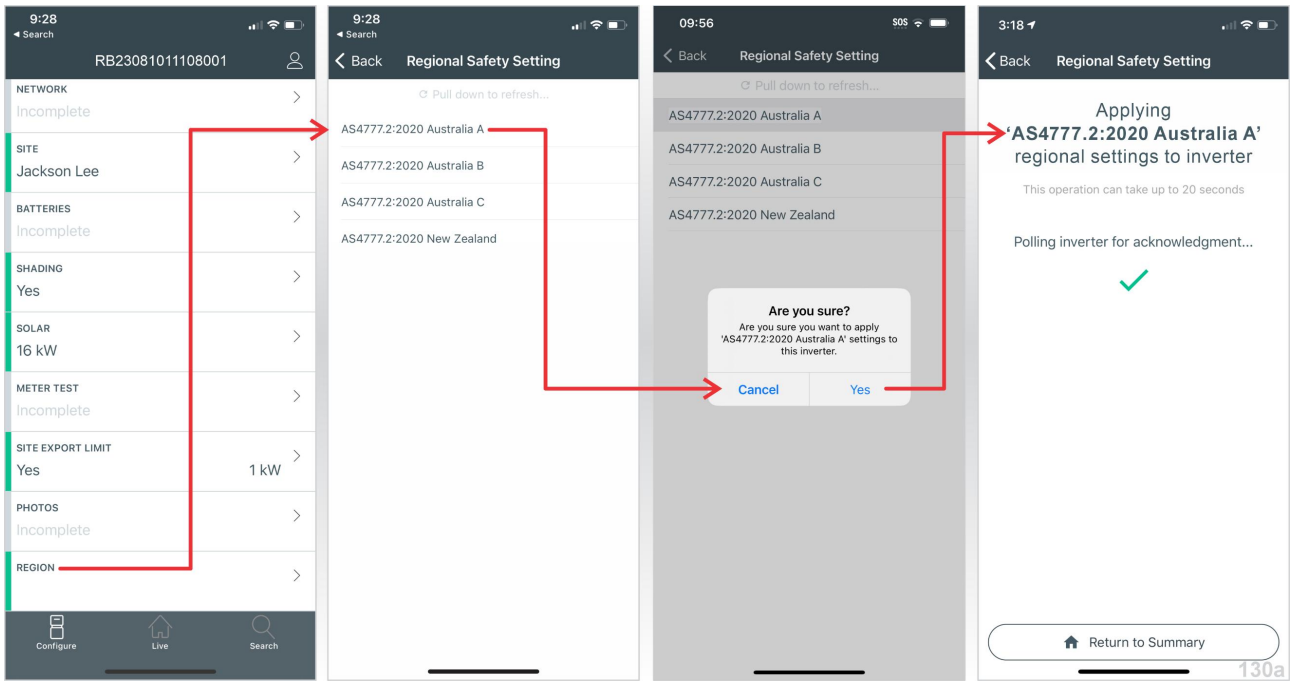

4.6. Notes on Export and Generation Limits

The inverter complies to the requirements of AS4777.2:2020 Clause 6. Generation Limits (hard and soft) and Export Limits (hard and soft) may be directly controlled by Installers, API users, or installers may request the Redback Customer Service Team to act on their behalf.

Generation and Export Limits are controlled using the tools listed below.

LIMIT TYPE	REDBACKINSTALL APP	REDBACK PORTAL (WEB)	MYREDBACK APP (OWNER'S APP)	API	CST
Export Limits	YES	YES	NO	YES	YES
Generation Limits	NO	YES	NO	YES	YES

4.7. Redback firmware version*

Redback Hybrid inverter firmware version is 2.014.

*Due to continuous improvement, the firmware number is subject to change without notice.

4.7.1. IDENTIFY FIRMWARE VERSION USING REDBACKINSTALL

STEP	PROCEDURE	ILLUSTRATION
1	Ensure the NETWORK LED is Blue, flashing, indicating that Bluetooth is available. If the LED is not flashing, restart the system and thus Bluetooth advertising (see section 5.3).	
2	Wait for the NETWORK LED to begin flashing Blue.	
3	If not already open, start RedbackINSTALL and sign in.	
4	The app will display a list of nearby Redback products that are advertising Bluetooth. Select the required Redback product from the list. Settings page will open.	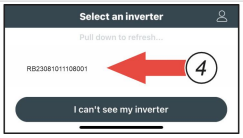
5	Touch SYSTEM INFORMATION to view the firmware version.	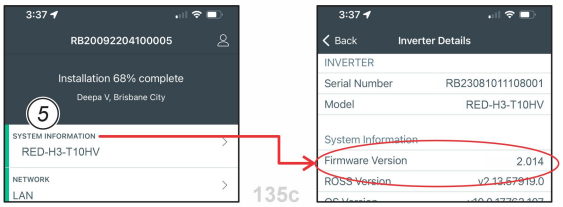

4.7.2. UPDATE FIRMWARE USING REDBACKINSTALL

STEP	PROCEDURE	ILLUSTRATION
1	Open the RedbackINSTALL app and connect to the inverter using Bluetooth. If necessary, restart the system and thus Bluetooth advertising (see section 5.3).	
2	In RedbackINSTALL open the **SYSTEM INFORMATION** panel. Touch **CHECK FOR UPDATES**.	
3	The app will check if a newer firmware version is available and advise current and latest version numbers.	

4 Touch **UPDATE FIRMWARE** to begin the firmware update process.

Updating firmware usually takes 2 to 5 minutes.

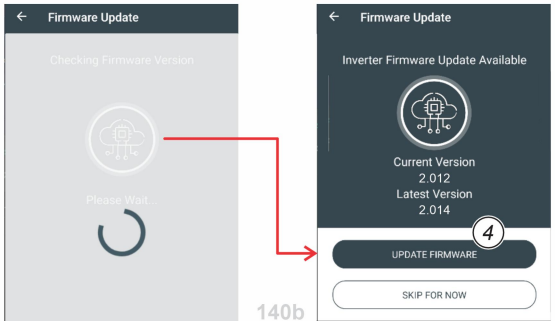

5 The app will confirm when the Firmware has been updated. Touch **Continue** to return to SYSTEM INFORMATION.

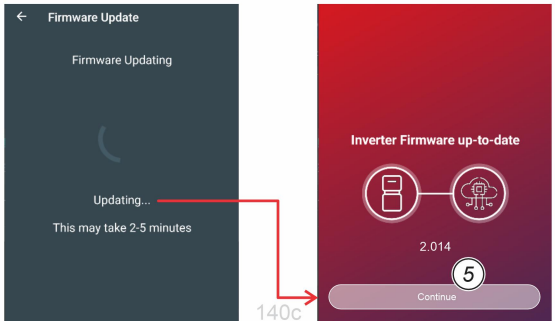

4.7.3. IDENTIFY FIRMWARE VERSION USING THE REDBACK PORTAL

STEP	PROCEDURE	ILLUSTRATION
1	Go to portal.redbacktech.com and login. The Inverters list will open (showing accessible inverters). Note: You will be unable to view the firmware of offline or unregistered inverters.	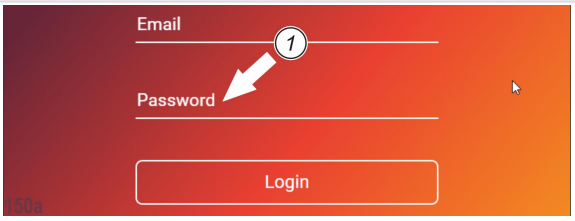
2	Find the target inverter. The Analysis page will display.	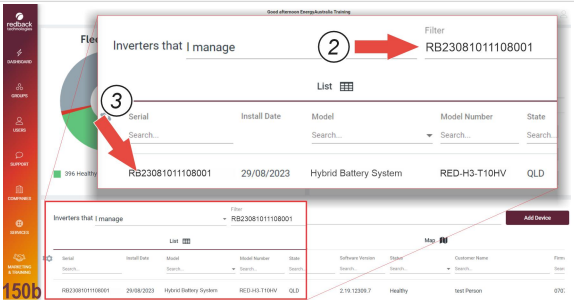
3	Select the inverter from the filtered list.	
3	The Inverter Properties window will display, and the Firmware Version is visible at the right.	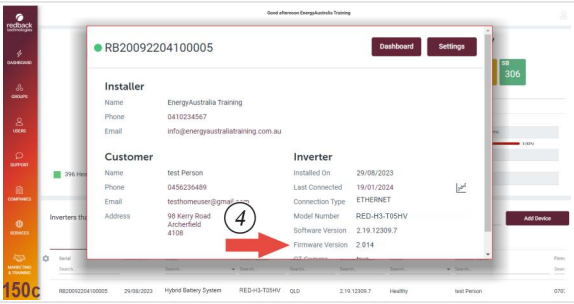

4.8. Compliance inspections

4.8.1. ASSIGN AN INSPECTOR

Installers may assign a Compliance Inspector to each new product installation. Assignment is completed on the Redback Portal. Products must be registered in the installer's fleet before an inspector can be assigned.

STEP	PROCEDURE	ILLUSTRATION
1	Go to portal.redbacktech.com and login. The Inverters list will open (showing accessible inverters). Note: You will be unable to view the firmware version of offline or unregistered inverters.	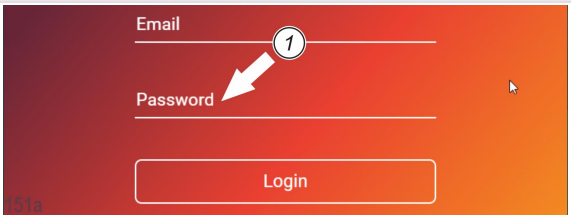
2	Filter to find the target inverter.	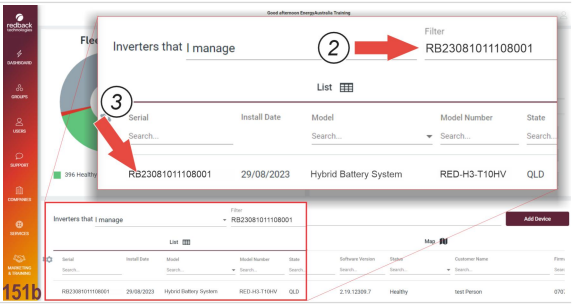
3	Select the inverter from the filtered list.	
4	The inverter properties popup will display. Select **Dashboard** at the top right.	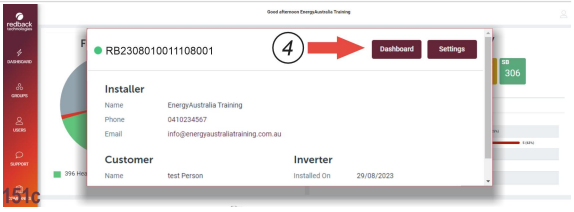
5	Select **USER ACCESS**	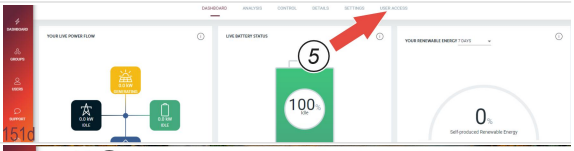
6	Enter **Inspector name and email**	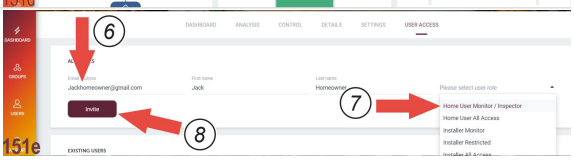
7	Select **Home User Monitor / Inspector** from the drop–down list	
8	Select **Invite**. An email will be sent to the nominated address.	
9	The Inspector will now appear in the list of users of this inverter.	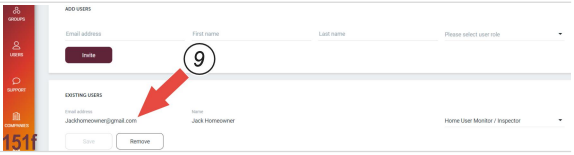

4.8.2. COMPLIANCE INSPECTION

Nominated Compliance Inspectors receive notifications when added as a product user. Their first notification will include a link to complete their user registration.

STEP	PROCEDURE	ILLUSTRATION
1	Go to portal.redbacktech.com and login. The Inverters list will open (showing accessible inverters). Note: You will be unable to view the firmware of offline or unregistered inverters. *Note: the first login will require acceptance of the Redback T&Cs.*	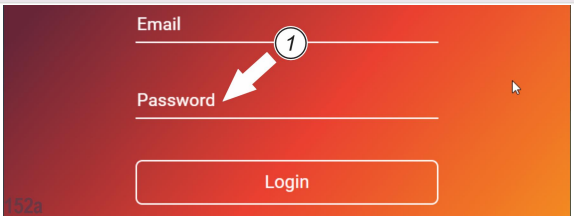
2	Filter to find the target inverter.	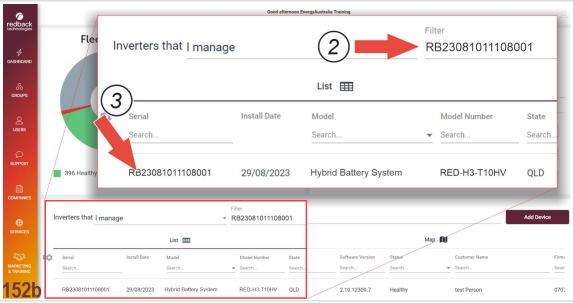
3	Select the inverter from the filtered list.	
4	The inverter properties popup will display. Select **Dashboard** at the top right.	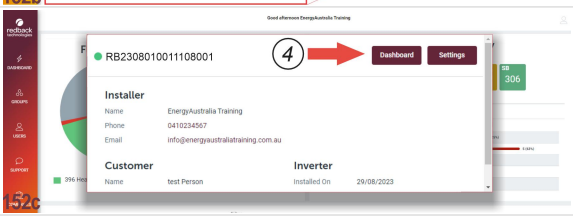
5	Select **SETTINGS** to open the products general settings.	
6	Select **View current settings** to see the Detailed Regional Safety Settings.	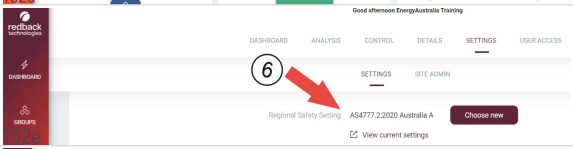
7	The Detailed Regional Safety Settings are read only. Scroll the page to see all settings. The settings may be **Printed** or **Exported to PDF** for record keeping.	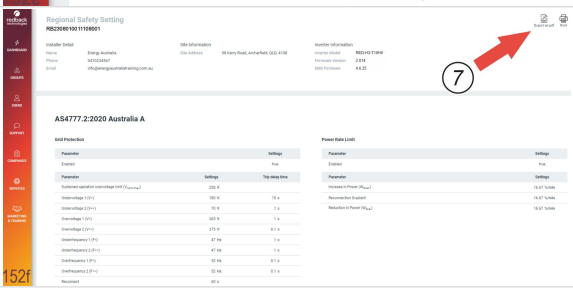

5. Inverter operation

The TxxHV has physical controls available at the inverter Control Panel. All sophisticated functions are managed using RedbackINSTALL or the Redback portal.

5.1. Shutdown procedure

Occasionally, it may be necessary to shut down the inverter interrupting all inverter functions, noting that PV, battery, and grid supplies remain energised to the isolators.

STEP	PROCEDURE	ILLUSTRATION
1	At the inverter, remove the Control Panel cover.	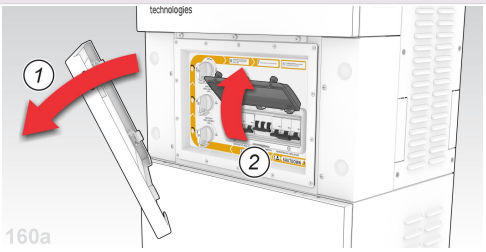
2	Open the Hinged Switch Cover.	
3	Switch the INVERTER AC isolator OFF (down).	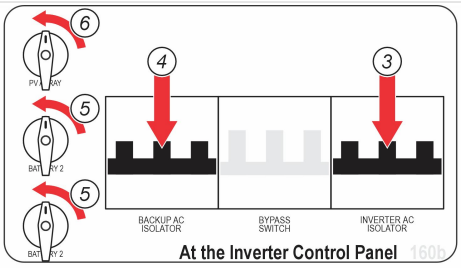
4	Switch the BACKUP AC isolator OFF (down).	
5	Turn the BATTERY SYSTEM DC isolators OFF (anticlockwise).	
6	Turn the PV ARRAY DC isolator OFF (anticlockwise).	
7	Restore weatherproofing: Close the Hinged Switch Cover and replace the Control Panel cover.	
8	At the main switchboard, switch the Solar Supply Main Switch OFF (Down). The inverter is now OFF: all software and communications are stopped, and no energy is being imported or exported from the inverter. **WARNING: PV and battery supplies remain energised to the isolators.**	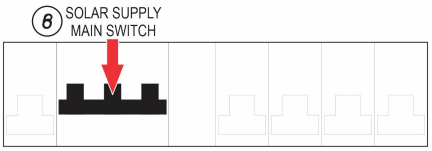
9	At the inverter, check that all Status Panel LEDs are OFF.	
10	Remove the screws from the sides and top of the Front Panel.	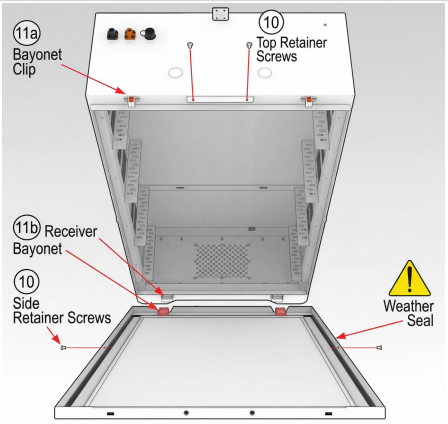
11	To remove the Front Panel: a. Standing directly in front, use a flat-blade screwdriver or similar tool to depress each upper bayonet clip whilst gently pulling the front cover toward your body. b. When both clips are released, slowly pull the front cover toward you until you can see and feel the concealed lower bayonets and receivers. c. Lift the panel from the receivers. Set the front panel aside.	

At the Inverter Control Panel 160b

At Main Switchboard 160c

Battery Enclosure Front Cover Removal 11a

12	Press and hold the BMS module button until the indicator light turns red and then release it to shut down the battery system.	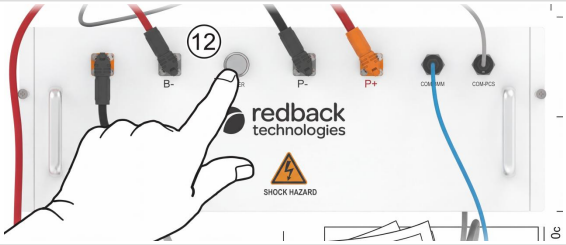

5.2. Bypass switch operation

The Bypass Switch is located at the inverter Control Panel. It controls the power to the Backup AC isolator. Its primary use is to manually connect the backup circuit directly to grid supply, when needed.

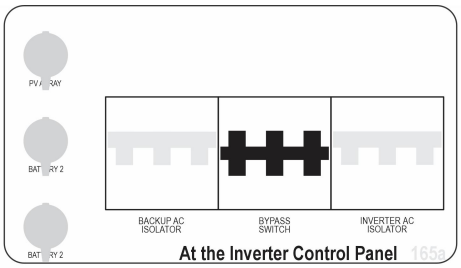

POSITION	FUNCTION	COMMENTS
Up	Power to the backup circuit is from the grid supply only, regardless of inverter status. The inverter no longer controls the backup circuit.	This mode ensures grid supply to the backup circuit if the inverter is not available or not operating reliably. If grid supply is lost, then no power will be supplied to the backup circuit from any source.
Middle	Backup circuit is isolated (depowered).	No power is sent to the backup circuit. As a rule, the Bypass Switch should never be left in this position.
Down	Power to the backup circuit is supplied and managed by the inverter, from any source.	This is the recommended mode of operation. If grid supply is lost the inverter will continue to supply the backup circuit from the batteries and PV, and the entire system will shut down when the batteries reach the minimum state of charge.

5.3. Inverter restart

Occasionally, it may be necessary to cold boot the inverter, to restart all software. A restart briefly interrupts all inverter functions, including backup, noting that PV, battery, and grid supplies remain energised to the isolators.

STEP	PROCEDURE	ILLUSTRATION
	Shutdown the system, if running:	
1	At the inverter, remove the Control Panel cover.	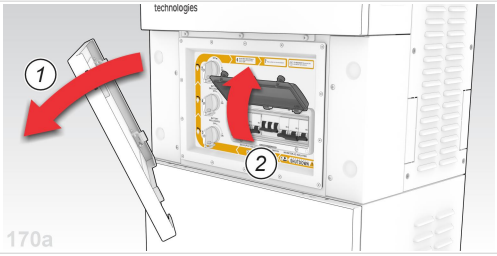
2	Open the Hinged Switch Cover.	
3	Switch the INVERTER AC isolator OFF (down).	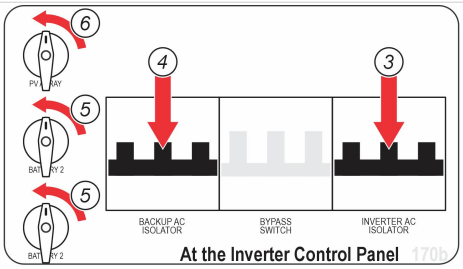
4	Switch the BACKUP AC isolator OFF (down).	
5	Switch the BATTERY SYSTEM DC isolators OFF (anticlockwise).	
6	Turn the PV ARRAY DC isolator OFF (anticlockwise).	
7	At the MSB or sub-board, switch the Solar Supply Main Switch OFF. Wait 10 seconds.	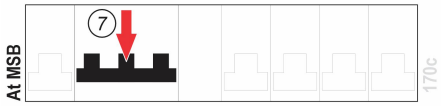
	To restart the system:	
1–5	At the inverter, working left to right, turn the isolators and switches ON as shown.	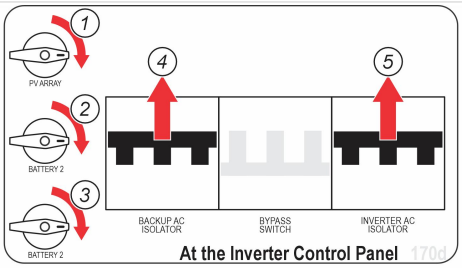
6	At the MSB or sub-board, switch the Solar Supply Main Switch ON.	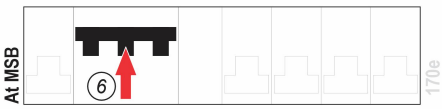
7	The inverter will resume normal operation in about 2 minutes, indicated by Inverter Status LEDs:	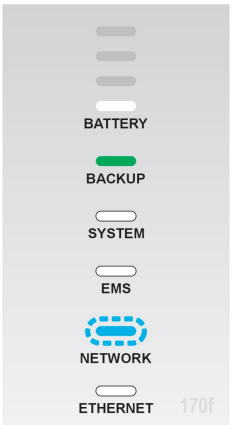
	ETHERNET — White; ON if Ethernet connection exists	
	NETWORK — Blue; Flashing (indicating Bluetooth)	
	EMS — White; ON	
	SYSTEM — White; ON	
	BACKUP — White; ON	
	BATTERY SOC — Varies with battery SOC	
8	Restore weatherproofing: Close the Hinged Switch Cover and replace the Control Panel cover.	

5.4. Inverter operating modes

The inverter operating modes are summarised below. Select modes using the Redback app or portal.

5.4.1. AUTO MODE

AUTO is the default operating mode, maximizing consumption of self-generated and stored energy. If the inverter mode has been changed, AUTO can be reselected from the portal.

If AC loads (House) exceeds solar generation, energy sources are prioritised as follows:

1. Solar
2. Battery
3. Grid

If solar production exceeds AC loads, destinations for self-generated energy are prioritised as follows:

1. AC Loads
2. Battery (storage)
3. Grid (if enabled)

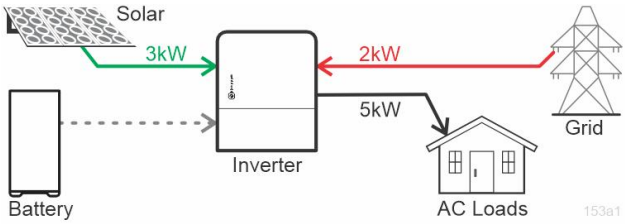

AUTO Mode: AC Load exceeds Solar Generation

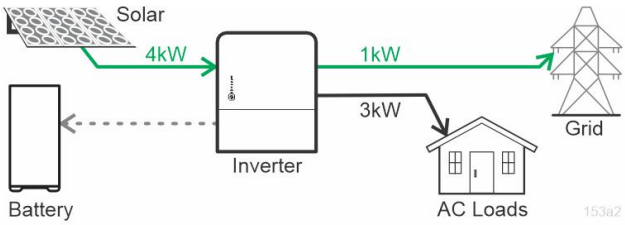

AUTO Mode: Solar Generation exceeds AC Load

5.4.2. STANDBY MODE

STANDBY mode is invoked automatically when no solar or battery energy is available. The TxxHV directs grid power directly to the AC Loads thereby minimising energy losses in the inverter e.g., heat.

The TxxHV automatically reverts to the previous mode of operation when solar or battery energy is available.

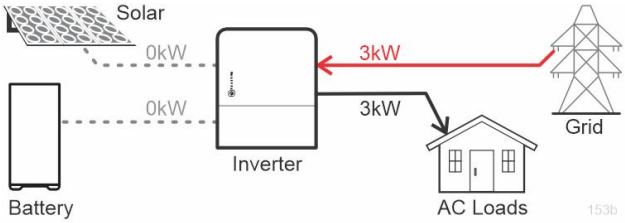

STANDBY Mode: No Solar or Battery Energy available

The backup circuit is RCD protected when installed according to 2.10.4. This is not optional.

5.4.3. CHARGE BATTERY MODE

CHARGE mode may be used to prepare for a severe weather event, and prioritises charging the battery at the nominated rate, from the grid.

Any available solar will supplement the grid charging up to a maximum charge rate as specified in section 9.

AC Loads are fulfilled by the grid.

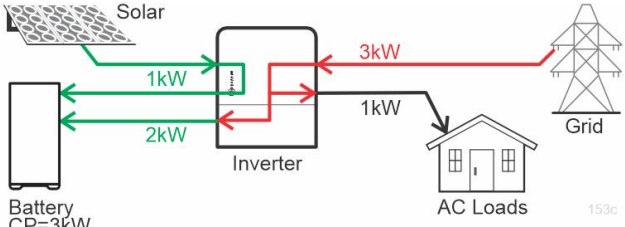

CHARGE BATTERY mode: Solar available

5.4.4. DISCHARGE BATTERY MODE

DISCHARGE mode is user selectable on the portal.

DISCHARGE mode prioritises battery discharge to the following:

1. AC loads
2. Grid

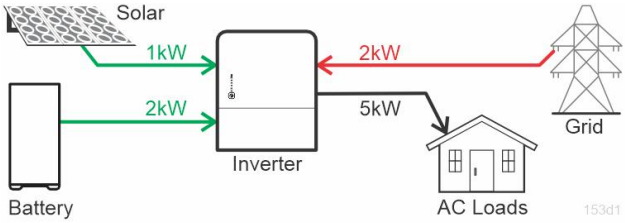

DISCHARGE BATTERY mode: (Solar + Battery) < AC Load

Battery discharge is at the nominated Discharge Power, supplemented by solar.

If AC Loads exceed (Battery + Solar), energy is imported from the grid.

If (Battery + Solar) exceed AC Loads, excess energy may be exported to the grid.

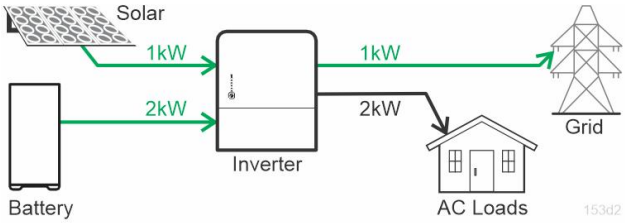

DISCHARGE BATTERY mode: (Solar + Battery) >AC Load

If (Battery + Solar) exceeds (AC Loads + LEP*) the battery discharge is prioritised, at the maximum possible rate, up to the nominated Discharge Power.

*LEP= Export Power Limit.

5.4.5. BACKUP MODE

BACKUP mode starts automatically when the grid supply is interrupted (default setting).

In BACKUP mode, the TxxHV supplies energy to the AC backup circuit only. Energy consumption from solar is prioritised and excess solar charges the batteries.

To maximise the effectiveness of the AC backup circuit the circuit should only support essential appliances such as refrigerators, or low energy devices such as fans, computers, tablets, or phones.

BACKUP mode is invoked within 0.05 seconds of a grid interruption. BACKUP mode reverts to the previous mode when the inverter detects grid supply has been restored for over one minute.

BACKUP mode may also be known as “Stand-alone Mode”.

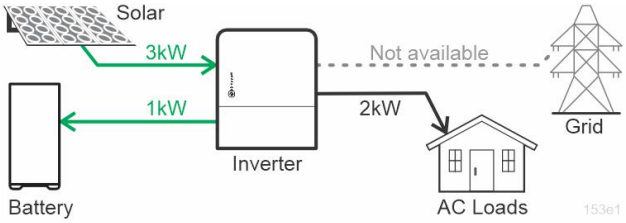

BACKUP mode: Solar generation is greater than Backup Load

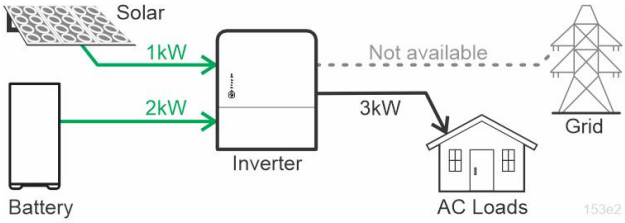

BACKUP mode: Solar Generation is less than Backup Load

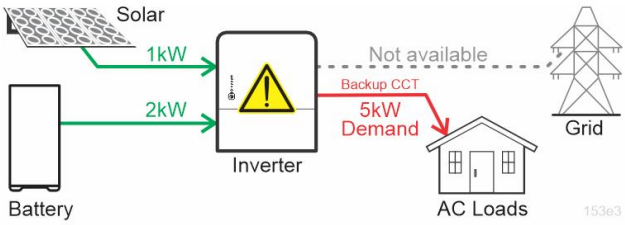

BACKUP mode: Solar + Battery is less than Backup Load

Notes:

- If available battery and solar power is less than the detected backup load the inverter will consider this an overload and will automatically shut down.
- The inverter will restart after approximately one minute. If overload persists, the cycle will repeat.
- The backup circuit is RCD protected when installed according to 2.10.4. This is not optional.

6. Troubleshooting

6.1. Earth fault alarm

If the Redback system detects an earth fault:

1. The System Error LED will be solid (see next page).
2. An email will be sent to Redback customer service, the installer, and the system owner.

An email is also sent when the alarm is cleared.

6.2. Inverter Status LEDs

The Redback TxxHV inverter has an LED array to show system status and aid diagnosis. The table below lists LED indications of errors or alerts, probable cause, and rectification steps. If the problem is not solved contact Redback Technologies for help.

Note: White, continuously-on LEDs (not flashing) indicate normal operation and are not listed below.

LED NAME	COLOUR		MEANING	SOLUTION(S)
ETHERNET		OFF	Ethernet not detected	If ethernet is required and installed, check cable and plugs.
NETWORK		Blue Flashing	Bluetooth available	The system can be accessed using RedbackINSTALL. Flashes for up to 30 minutes. Note: Bluetooth will advertise automatically if the system restarts or if internet connection is lost for more than 30 consecutive minutes.
		Blue ON	Bluetooth connected	Phone connected. Proceed with onboarding or setup.
		Orange ON	No connection to Redback Cloud	Internet connection lost. Ensure the local Wi-Fi or Ethernet network is operating correctly.
		Orange Flash	Internal communications	Contact Redback.
		White Flashing	Factory test mode	Contact Redback.
		OFF	Faulty hardware or power failure	Are other LEDs ON? If Yes, contact Redback.
EMS		Blue-Orange	Fault exists Bluetooth available	The system can be accessed using RedbackINSTALL. Flashes for up to 30 minutes.
		OFF	Internal communications	Contact Redback.
SYSTEM		White Flashing	Startup in progress	Wait for LED to stabilise to White ON.
		Orange ON	Standby	OK. Indicates no PV and no Battery interaction with grid.
		Red Flashing	Backup overload	Reduce loads on Backup Circuit.
		Off	Faulty hardware or power failure	Are other LEDs ON? If Yes, contact Redback.

BACKUP		Orange ON	Grid outage	OK. Indicates Inverter AC isolator is OFF or the grid is not available. Backup will be supported by the batteries.
		OFF	OFF	Indicates Backup Circuit is disconnected. Switch Backup AC isolator ON (up).
BATTERY		All OFF	Batteries are disconnected or not active.	Ensure battery System DC isolation is ON (up). Ensure all Battery and BMS cables are installed correctly. Restart system.

6.3. Energy Meter diagnostics

6.3.1. ENERGY METER FEATURES

The meter detects the grid energy of one phase and provides this information to the inverter EMS module.

The front LED indicates if the meter has power. In normal operation, the meter LED flashes five times per second, indicating data transmission is occurring.

The meter can control one external relay.

6.3.2. ENERGY METER/CT TROUBLESHOOTING

LED	INDICATION	CAUSE	REMEDY
	Flashing rapidly	Meter communicating	No action required. This is the normal operating mode.
	ON continuous	Fault	Replace meter
	LED OFF.	No power to meter	Check all connections. Check switchboard Main Switch is ON. On the meter, check voltage exists between N and L1.
		Meter faulty	Replace meter
Power flow direction is not as expected.		CT installed incorrectly (reversed)	Reverse polarity of CT by reversing direction of K->L relative to cable.
Batteries charging at night when inverter is in Auto mode.		CT installed incorrectly (reversed)	Reverse polarity of CT by reversing direction of K->L relative to cable.

6.4. System Lockout

The individual parts of the system can be electrically locked out at the Control Panel.

PV Array and Battery Enclosure DC isolators

With the isolator in the OFF position, the red plunger can be depressed and a lockout device (e.g., small padlock) attached to prevent operation.

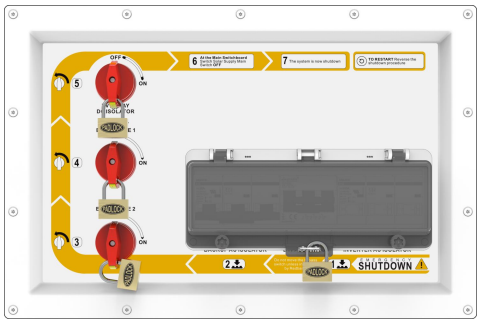

AC Isolators and Bypass Switch

When the Hinged Switch Cover is fully closed and sealed a tongue protrudes through the cover. The tongue has a hole through which a suitable lockout device can be passed, preventing the cover from being opened.

Note: The use of large lockout devices may prevent the Control Panel Cover from being re-attached. This does not affect weatherproofing: the rotary isolators are IP66 and the Switch Cover is IP67 (when properly closed using thumbscrews).

6.5. Internet connection problems

The owner must maintain a stable* connection to the Redback Cloud otherwise warranty support will be affected.

* Excluding internet or power outages beyond the owner's control. Ethernet LAN connection and connection of internet hardware to a backup circuit is recommended.

An internet connection enables the inverter to send data to the Redback cloud, where you can use the Redback app or portal to view performance and fine tune the system.

Occasionally, the inverter may lose internet connection and be reported as "offline". Ethernet connected systems usually self–repair when a system restarts. Wi-Fi problems usually require that the installation details be updated.

The most common causes of "offline" reports are:

INDICATION	CONNECTION ETHERNET	AFFECTED WI-FI	REMEDY
Change of Internet Service Provider e.g., Telstra, Optus, TPG, Dodo etc	✓	✓	Ethernet: Restart the system. Wi-Fi: Restart and re–onboard
New router or modem	✓	✓	
Change of Network name or SSID	✓	✓	
Change settings in ADSL modem	✓	✓	
Changed Wi Fi or Network password		✓	Wi-Fi: Restart and re–onboard
Too many users or devices on the Wi-Fi network		✓	Limit users or devices or upgrade Wi-Fi router or connect using ethernet.
Wi-Fi signal is weak or variable due to obstructions or distance between the inverter and your Wi-Fi router's antenna.		✓	Experiment with Wi-Fi router locations or use a Wi Fi extender or connect using ethernet.
Attempting connection to a 5Ghz Wi–Fi network.		✓	This equipment is not compatible with 5Ghz Wi–Fi networks. Use a 2.4Ghz network or ethernet.

6.6. Inverter unexpected shutdown

The inverter may shut down or isolate itself from the grid if it detects conditions that may cause damage to the inverter or batteries; or create an unsafe situation. Incident causes can be diagnosed by examining the data available on the portal. Unexpected shutdowns may occur in the following circumstances:

CAUSE	RELEVANT CHARTS FOR DIAGNOSIS (IN	COMMENT
Continuous backup circuit load exceeds permitted load.	Backup Load- Power	May occur when too many devices are active on the backup circuit.
Backup circuit load too high for over 3 seconds. T10HV 15000VA T15HV 22500VA T20HV 30000VA T25HV 37500VA T30HV 45000VA	Backup Load- Power	May occur when too many high current appliances are used simultaneously, or when a large load starts up, such as a pump.

Backup load exceeds available Battery + Solar power.	Backup Load- Power Battery- Power PV- Power	
If internal temperature is greater than 60°C.	Inverter- Temperature Battery Cabinet- Temp.	Output is reduced above 45°C.
Grid supply did not comply with local or DNSP requirements.	Grid- Voltage Grid- Frequency Grid- Status	Check Region setting is correct. Check voltage–drop calculations. Tap setting on transformer may be incorrect. Contact DNSP. The EMS and backup circuit will operate if power is available from PV or batteries.
DNSP has control of the inverter and has initiated a shutdown or disconnection from the grid.	Grid-Status Inverter-Inverter Mode	Check the terms of the owner's energy contract. This may be agreed and therefore normal activity.

* Charts offer comprehensive detail about the system's status and performance. There may be a significant delay when retrieving stored data. For owners, by default, charts are hidden.

6.7. Reset batteries

Occasionally, it may be necessary to reset the batteries. This should only be done if instructed by Redback Technical Support.

INFORMATION. For more information about battery features refer to the OEM documentation available at redback.link\docs

STEP	PROCEDURE	ILLUSTRATION
1	At the inverter: Remove the Control Panel Cover Open the Hinged Switch Cover. Switch the BATTERY SYSTEM DC isolators **OFF**.	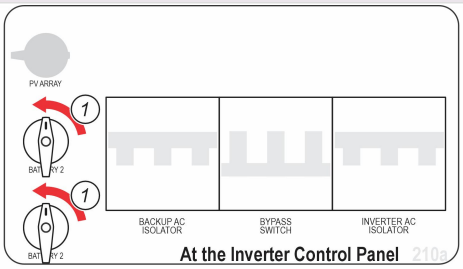
2	Remove the Battery Enclosure Front Cover (refer to section 2.4)	
3	Press and hold the BMS Power switch for three seconds. The indicator LED will change to OFF.	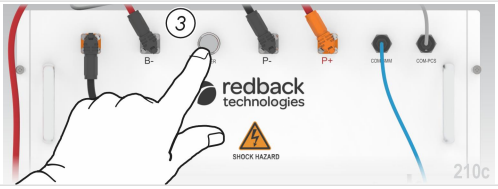
4	Wait 10 seconds for the BMS to de-energize.	
5	Restart the Battery Stack as per section 4.2.	
6	At the Inverter Control Panel, turn the BATTERY SYSTEM DC isolators **ON**.	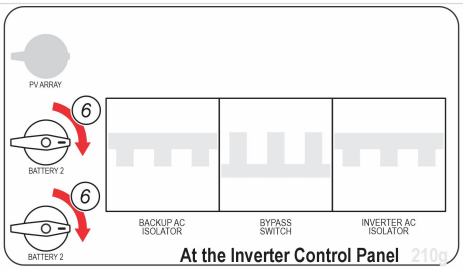
7	Observe the Inverter Status LEDs. After 30 seconds one or more BATTERY LEDs should illuminate indicating successful connection and existing battery SoC.	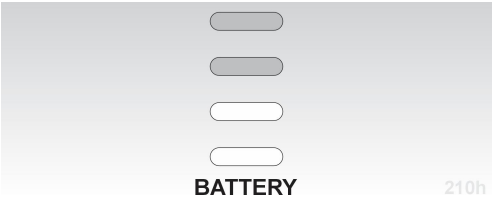

7. Maintenance

The Redback TxxHV is a low maintenance product. Annual maintenance is needed.

Do not remove covers or access any areas not mentioned below.

Note: Vents and heatsink fins may require more frequent cleaning in dusty conditions.

WARNING: ELECTROCUTION HAZARD. Lethal voltages may be present. Isolate all sources of power and test before removing covers.

ITEM	NAME	REASON	PROCEDURE	BY SERVICE PERSON	BY OWNER
1	Cabinet	Cabinet may become soiled.	• Wipe down outside of cabinet with a just-damp cloth. Immediately wipe dry with a microfibre cloth. • Do not use cleaning agents as they may damage the finish.	☑	☑
2	Inverter side and top vents	Airflow is reduced when dust or debris accumulates on the vents.	Brush and vacuum the vents.	☑	☑
	Items 4-9 are to be completed by an approved person. In all cases, the system must be fully shut down and all sources of power isolated before commencing work.				
3	Battery enclosure vents and filters	Airflow is reduced when dust accumulates on the vents and internal filters. Vents are located on the side and base of the enclosure. Filters are located inside to the LHS and RHS. The lower vents are more likely to be affected.	• Shutdown system. • Remove Battery Enclosure front cover. • Remove batteries. • Gently blow the side vents and filters clean from inside the enclosure. • Brush and blow-out or vacuum the lower filter. • Clean out underneath the enclosure. • Refit all parts.	☑	☒
4	Fasteners	Screws are used to ensure the structural integrity of the system assembly and fitment.	• Check all cover retainer screws. Tighten as necessary.	☑	☒
5	Inverter heatsink fins and fans	Cooling efficiency reduces when dust, dirt or debris accumulate on the heatsink and or fan blades.	• Shutdown the system. • Remove the Inverter Top and Cover to access the heatsink shroud. • Carefully detach the heatsink shroud and set aside. The shroud is tethered to the inverter by the fan power cable. • Clean the heatsink fins and shroud fans using a small brush, cloth, or compressed air. If using air, do not over-speed the fans. • Replace shroud and covers and restart the system.	☑	☒
6	Battery Enclosure seal	Concealed seal ensures enclosure water resistance.	• Remove covers and inspect seals for hardening, tears, or other damage. Look for signs of water in cabinets.	☑	☒

7	Cable seals	Cable seals prevent water and insects entering the Inverter or Battery Enclosure.	• Remove Inverter Side Covers and Connector Covers • Tighten all cable glands and waterproof caps.	☑	☒
8	4G port	Water entering the port or module may affect communications.	• Ensure the 4G port cover or module (whichever is fitted) is fully inserted into the port and the retainer latches are engaged.	☑	☒

8. Battery Maintenance

Servicing of batteries should be performed or supervised by personnel knowledgeable about batteries and the required precautions.

LIKE-FOR-LIKE REPLACEMENT: When replacing batteries, replace with the same type and number of batteries or battery packs, except where the manufacturer has advised otherwise.

CAUTION: Do not dispose of batteries in a fire. The batteries may explode.

CAUTION: Do not open or damage batteries. Released electrolyte is harmful to the skin and eyes. It may be toxic.

CAUTION: A battery can present a risk of electrical shock and high short-circuit current. The following precautions should be observed when working on batteries:

- Remove watches, rings, or other metal objects.
- Use tools with insulated handles.
- Wear rubber gloves and boots.
- Do not lay tools or metal parts on top of batteries.
- Disconnect charging source prior to connecting or disconnecting battery terminals.
- Determine if battery is inadvertently grounded. If inadvertently grounded, remove source from ground. Contact with any part of a grounded battery can result in electrical shock. The likelihood of such shock can be reduced if such grounds are removed during installation and maintenance (applicable to equipment and remote battery supplies not having a grounded supply circuit).

CAUTION: Batteries are heavy!

Seek assistance when lifting or handling batteries.

Note:Before and after battery maintenance, follow these steps to remove and

install cabinet doors:

STEP	PROCEDURE	ILLUSTRATION
1	At the inverter, remove the Control Panel cover.	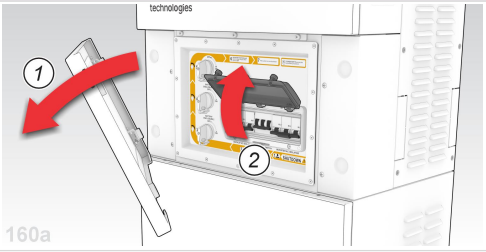
2	Open the Hinged Switch Cover.	
3	Switch the INVERTER AC isolator OFF (down).	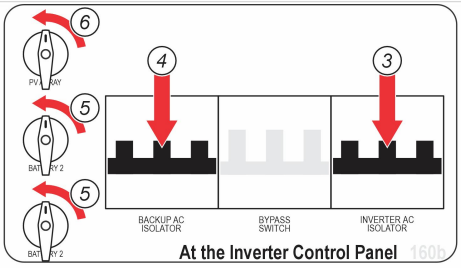
4	Switch the BACKUP AC isolator OFF (down).	
5	Turn the BATTERY SYSTEM DC isolators OFF (anticlockwise).	
6	Turn the PV ARRAY DC isolator OFF (anticlockwise).	
7	Restore weatherproofing: Close the Hinged Switch Cover and replace the Control Panel cover.	
8	At the main switchboard, switch the Solar Supply Main Switch OFF (Down). The inverter is now OFF: all software and communications are stopped, and no energy is being imported or exported from the inverter. **WARNING: PV and battery supplies remain energised to the**	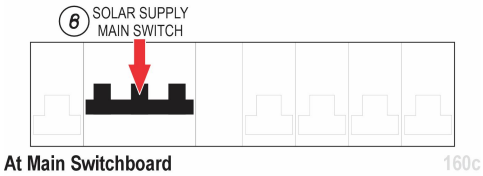

	isolators.
9	At the inverter, check that all Status Panel LEDs are OFF.
10	Remove the screws from the sides and top of the Front Panel.
11	To remove the Front Panel: a. Standing directly in front, use a flat-blade screwdriver or similar tool to depress each upper bayonet clip whilst gently pulling the front cover toward your body. b. When both clips are released, slowly pull the front cover toward you until you can see and feel the concealed lower bayonets and receivers. c. Lift the panel from the receivers. Set the front panel aside.
12	Press and hold the BMS module button until the indicator light turns red and then release it to shut down the battery system.
13	Remove the power line and communication line that need to be repaired. for the battery, unscrew the bolts on both sides, and then remove the battery.
14	Install the new battery.
15	Installation and removal of power and communication cables.
16	Start the battery.
17	Install the front panel: a.Standing directly in front.Align the bayonets on the panel with the cabinet receivers and insert it. b.Press the panel from bottom to top to align the panel bolt hole with the cabinet body bolt hole. Gently tap the each upper bayonet clip buckle to lock it.
18	Fix the top and sides of the panel with M6*8 screws at a torque of 7.5 N.m.

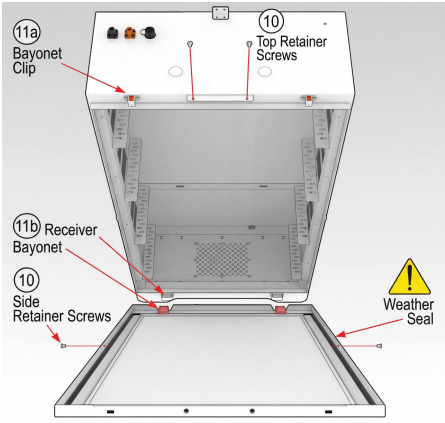

Battery Enclosure Front Cover Removal 11a

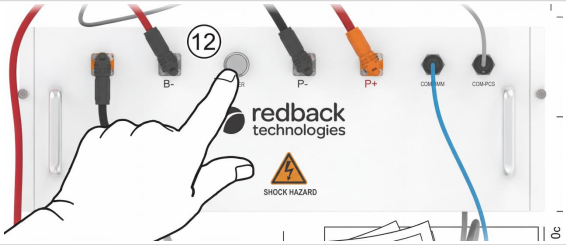

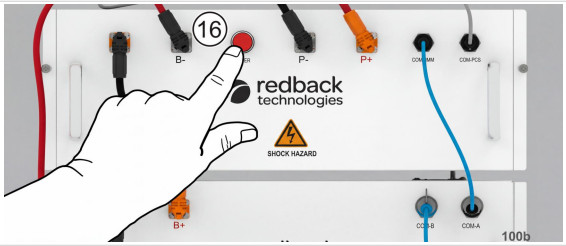

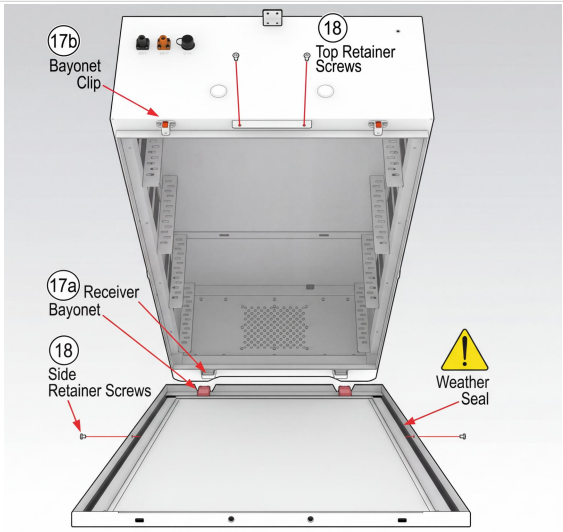

Battery Enclosure Front Cover Installation 11b

9. Specifications

INVERTER MODEL (PREFIX: RED-H3-)	T10HV	T15HV	T20HV	T25HV	T30HV
System rating	9.9kW	15kW	20kW	25kW	29.9kW
PV PORT					
Number of MPPTs	3				
Strings per MPPT Input	2/2/2				
MPPT Operating Voltage (range)	DC 180 – 900V				
Startup Voltage	DC 100V				
MPPT Full Load (Range)(DC V)	220-850V	220-850V	290-850V	245-850V	290-850V
Maximum Input Voltage (Vmax)	DC 900V				
Maximum Current (Imp)	DC 40/40/40A				
Short Circuit Current (Isc)[1]	DC 50/50/50A				
Maximum PV Input Power (Wp)[2]	20000	30000	40000	45000	45000
Maximum Back Feed Current	0A				
Decisive Voltage Class (DVC)	DVC-C				

[1] Manufacturer's declared and tested Max Short Circuit Current (I_{sc} Max) [2]Over-panelling benefits vary by location

GRID INTERACTIVE PORT	T10HV	T15HV	T20HV	T25HV	T30HV
Nominal Voltage (V AC, all models)	3+N+PE, 220/380V, 230/400V, 240/415V				
Nominal Frequency (Hz, all models)	50				
Rated Current (AC A/phase)	14.5	21.7	29	36.2	43.4
Max. Output Current (AC A/phase)	14.5	24.0	31.9	39.9	43.4
Rated Active Power (AC W)	9999	15000	20000	25000	29999
Rated Apparent Power (VA)	9999	15000	20000	25000	29999
Max Output Apparent Power (VA)	9999	16500	22000	27500	29999
Max Input Current (AC A/phase)	28.3	28.3	37.7	47.2	56.6
Max Input Apparent Power (VA)	19500	19500	26000	32500	39000
Power Factor (range)	0.8 lagging to 0.8 leading				
Output Current THD	<3%				
Inrush Current (A)	120			180	
Maximum Output Fault Current (A)	64			95	
Maximum Output Overcurrent Protection (A)	95.5			140	
Decisive Voltage Class (DVC)	DVC-C				

BACKUP PORT	T10HV	T15HV	T20HV	T25HV	T30HV
Nominal Output Voltage (AC V, all models)	3+N+PE, 220/380V, 230/400V, 240/415V				
Nominal Output Frequency (Hz, all models)	50				
Rated Current AC (A/Per phase)	14.5	21.8	29	36.3	43.5
Rated Active Power (AC W)[1]	9999	15000	20000	25000	29999
Nominal Apparent Power (VA)	9999	15000	20000	25000	29999
Rated Apparent Power (VA)	9999	15000	20000	25000	29999
Peak Apparent Power (VA, 3 seconds)	15000	22500	30000	37500	45000
Power Factor (range)	0.8 lagging to 0.8 leading				
Output Voltage THD	<3%				
Inrush Current (A)	120			180	
Maximum Output Fault Current (A)	64			95	
Maximum Output Overcurrent Protection (A)	95.5			140	
Decisive Voltage Class (DVC)	DVC-C				

BATTERY PORT	T10HV	T15HV	T20HV	T25HV	T30HV
Voltage (nominal) (DC V)	180 – 800				
Max. Current (charge)(DC A)	2*50				
Max. Power (charge) (DC W)	9999	15000	20000	25000	29999
Max. Current (discharge) (DC A)	2*50				
Max. Power (discharge) (DC W)	10000	15000	20000	25000	29999

INVERTER GENERAL INFORMATION	
Operating Temperature	-40°C to 60°C
Operating Temperature Derated Output	Over 45°C
Operating Relative Humidity	0 – 100%
Operating Altitude	0-4000m (derated above 3000m)
Protective Class	I
Ingress Protection Rating	IP66
AC Overvoltage Category	OVC III
DC Overvoltage Category	OVC II
Active Anti-islanding Method	Active Frequency Shifting
Moisture Location Category	4K4H
External Environment Pollution Degree	Grade 1, 2 and 3
Inverter Topology	Non-isolated
Country of Origin	China
Demand Response Modes	DRM 0
Standby Self-Consumption (Night)	32W
Noise Emissions (Inverter only)	<50 dBm♦
Warranty	10 years

♦Measured in Redback laboratory at 1m in front of Inverter.

EFFICIENCY	
Maximum Efficiency	97.6%
European Efficiency	97%

INVERTER PHYSICAL DATA	
Dimensions (W x D x H mm excluding	652 x 253 x 800
Weight (Bare, as lifted onto wall mount during installation)	65 kg
Weight (installed, with covers and wall mount, excluding AC cables)	68.6 kg
Materials	Aluminium; Stainless steel fittings
Finish	Powdercoat and internal sealant

BATTERY SYSTEM DATA	STANDARD	STANDARD	OPTIONAL	OPTIONAL
Standard Battery System Models (Prefix RED-P1-)	BE14V	BE21HV	–	–
Optional Battery System Models	–	–	BE28HV	BE35HV
Battery Type	LiFePO4			
Battery Depth of Discharge	95%			
Short Circuit Current	400A			
Decisive Voltage Class (DVC)	DVC-C			
Battery System Name	High Voltage P1 Series Battery System			
Maximum number of enclosures	2	2	1	1
Battery Model	RED-P1-7000HV			
Number of Battery Units (N)	2	3	4	5
Storage Capacity	14kWh	21kWh	28kWh	35kWh
Usable Capacity	13.3kWh	19.95kWh	26.6kWh	33.25kWh
Nominal Power	7.04kW	10.56kW	14.08kW	17.6kW
Maximum Voltage	DC160.6V	DC240.9V	DC321.2V	DC401.5V
Minimum Voltage	DC110V	DC165V	DC220V	DC275V
Nominal Voltage	DC 140.8V	DC 211.2V	DC 281.6V	DC 352V

Max Charging Current			DC 95A		
Recommend Charging Current			DC 50A		
Max Discharging Current			DC 95A		
Recommend Discharging Current			DC 50A		
Operating Temperature(Charge)			-10°C to 55°C		
Operating Temperature(Discharge)			-20°C to 55°C		
Operating Altitude			<2000m		
Protective Class			I		
Ingress Protection Rating			IP54		
Noise emissions			<35dBA♦		
Dimensions (Width x depth)			652 x 315 mm		
Dimension (Height mm)		1300	1300	1900	1900
Installed weight	No batteries installed (kg)	42.6	42.6	53.6	53.6
	With BMS and Batteries (kg)	180	242	315	377
Material			Aluminium cabinet and front cover		
Finish			Powdercoat and internal sealants; Stainless fittings.		

♦Measured in Redback laboratory at 1m in front of Battery Enclosure.

SYSTEM PHYSICAL DATA (INSTALLED)		
Dimensions (W x D x H, with one BE)	668 x 315 x 2100 mm	
Dimensions (minimum W x D x H, with optional BE)	1754x 315 x 2100 mm	
Installed weight	With primary BE14HV (2 batteries)	248.6 kg
	With primary BE21HV (3 batteries)	310.6 kg
	With secondary BE21HV	Add 56 kg
	With secondary BE35HV	Add 67 kg
	For batteries in 2nd enclosure	Add 62kg each

ISOLATORS	PV PORT	GRID INTERACTIVE PORT	BACKUP PORT	BATTERY PORTS
Manufacturer Part Number	PROJOY PEDS150R-HM55R-6	NOARK B1E-3P-100	NOARK B1E-3P-80	PROJOY PEDS150R-HM55R-2
Rated Insulation Voltage	1500V	500V	500V	1500V
Rated Impulse Withstand Voltage	8000V	8000V	8000V	8000V
Rated Operational Current	55A	100A/phase	80A/phase	55A
Rated Short-time Withstand Current (Icw)	780A	640A	512A	780A
Rated Short-circuit Making Capacity (Icm)	1200A	960A	768A	1200A
Rated Breaking Capacity (Isc)	–	6000A	6000A	–

COMMUNICATIONS PORTS AND PROTOCOLS	
Ethernet	RJ45; Straight-through; for LAN connection.
Meter	RJ45 (shared); RS485 MODBUS
DRED	RJ45 (shared); DRM0
BMS	RJ45; straight-through; For comms to Battery Enclosure

PART1	Reserved for future use		
PART2	Reserved for future use		
Wi-Fi	802.11b/g/n/ac; 2.4GHz; For LAN connection if Ethernet not used; External antenna required		
4G	Optional; External 4G module required		
Bluetooth (on EMS)	BLE, for inverter configuration using Installer app		
NFC (on EMS)	For starting Installer app		
Relay	Controllable via connection to Redback power meter		
Interlock	Not supported		
USER INTERFACE			
Front Panel Display	Coded, coloured LEDs		
Communications	Bluetooth for commissioning; Wi-Fi, ethernet or 4G for remote access		
Remote Access	Web Portal; MyRedback app		
Remote Firmware Updates	Supported		
Power/Energy Monitoring	Includes 1 x utility grade Power Meter (class 1)		
CERTIFICATIONS AND APPROVALS			
AS/NZS 4777.2:2020	IEC 62116:2014	IEC 60529	RCM
IEC 62109-1:2010	IEC 62040-1:2017	EN 61000	CE Mark (LVD, EMC, RoHS directives)
IEC62109-2:2011	IEC 62477-1:2012		
DESIGNED WITH INSTALLATION STANDARDS CONSIDERED			
AS/NZS 3000:2018	AS/NZS 5139:2019	AS/NZS 5033:2021	

10. Related links and documents

DOCUMENT	COMMENT	LINK
RED-H3-TxxHV Installation Manual[1]	Latest version of this document in PDF	redback.link/thvim
RED-H3-TxxHV Installation Quick Start[1]	Memory booster for experienced installers	redback.link/thvqs
RED-H3-TxxHV Single Line Diagram[1]	For Independent and AC-coupled installations.	redback.link/thvsld
RED-H3-TxxHV Owner's Manual[1]	Day-to-day usage of the inverter	redback.link/thvom
KB86 Smart Load Control[1]	Smart Load relay configuration and control	redback.link/rbslc
KB87 Site Manager[1]	Coordinating multiple Redbacks at one site	redback.link/rbsm
Application form	Apply for Redback Authorised Installer Status	redback.link/apply
Redback Document Library	Password required	redback.link/docs
SafeWork Australia	Safe work procedures	safeworkaustralia.gov.au

1. The latest versions available from the Redback Portal may differ from printed documents included in the box, but they are backward compatible, unless otherwise stated. The latest versions contain corrections, improvements and information not available at the time of printing.

11. Close-up and handover

11.1. Close-up

After the Inverter is commissioned:

ITEM	PROCEDURE	COMPLETED
1	Replace all covers. • Battery Enclosure Front Cover (4x M6x8 screws. Torque to 7.5 N.m.) • Inverter Connector Covers (2x M4x12 screws and M5 Thumbscrew. Torque to 4 N.m.) • Inverter Side Panels (4x M4x12 screws. Torque to 4 N.m) • Inverter Top Panel (4x M4x12 screws. Torque to 4 N.m) • Inverter Control Panel Cover (retained by magnets)	

2	Clean worksite and dispose of rubbish appropriately.	

11.2. Handover to owner

With the owner:

ITEM	PROCEDURE	COMPLETED
1	Walk through the installation, ensuring the owner understands what has been installed (and where), including any backup circuits.	
2	Explain the limitations of the system, including the possibility of overloading the backup circuit by using too many devices simultaneously, even when the grid is connected.	
3	Demonstrate how to recover after a BACKUP circuit overload.	
4	Demonstrate how and explain when to use the BYPASS switch.	
5	Help the owner to compete their Redback account setup, if not already done.	
6	Help the owner to download the app, demonstrate features, and answer questions.	
7	Help the owner to log on to portal and demonstrate, including how to: • Review performance • Setup battery charge/discharge schedules • Setup relay schedules • Raise an on-line support request	
8	Handover to the owner, including: • Owner's Manual • Warranty Booklet • Installation Manuals (optional)	

<End of Manual>

INSTALLATION DETAILS
ADDRESS

INSTALLATION DATE / / 2 0 2

INVERTER
RB

BATTERY ENCLOSURE
RB

RED-H3-TxxHV SINGLE LINE DIAGRAM - INDEPENDENT INSTALLATION

Installer: Complete and retain for your site documentation

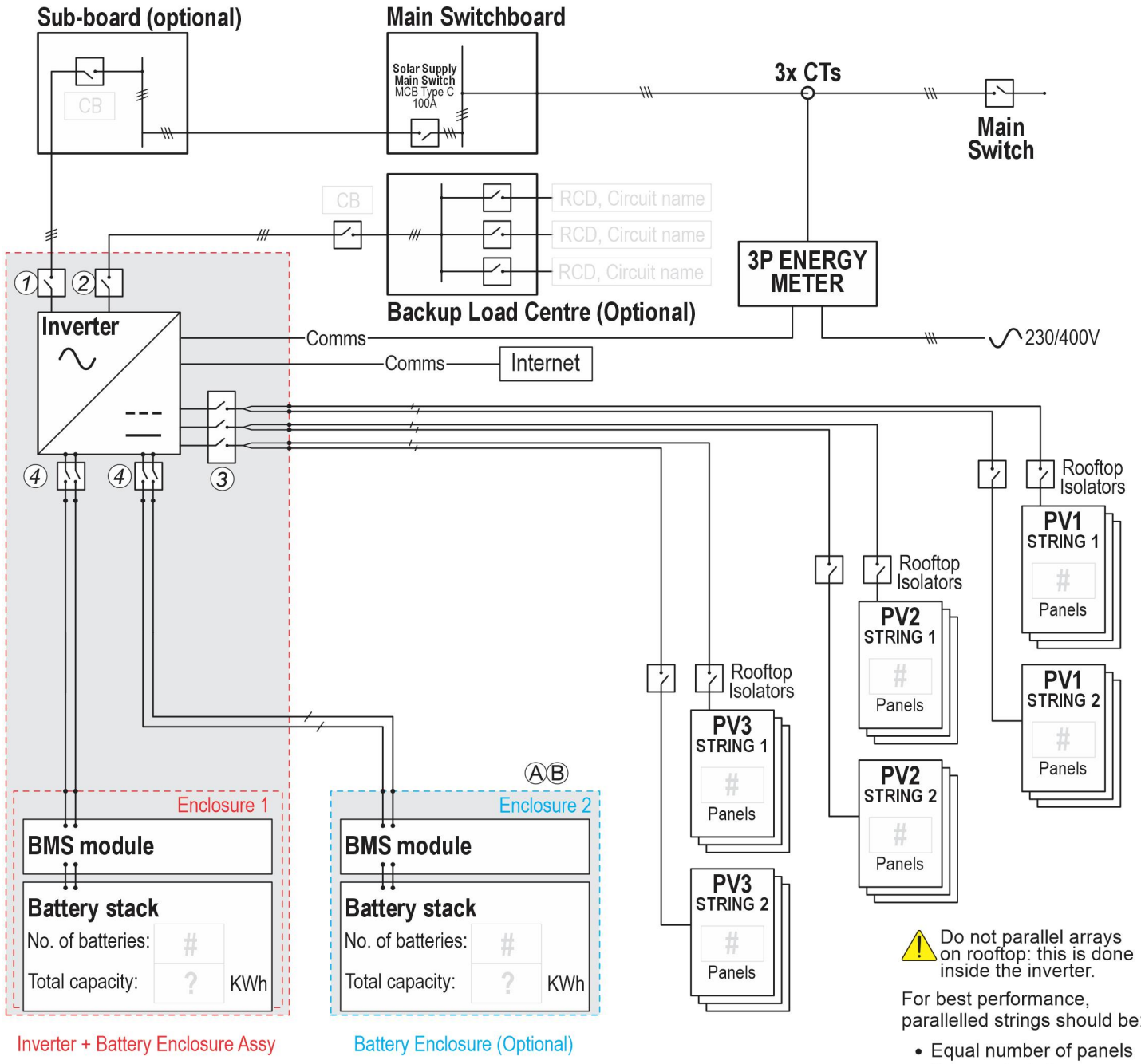

Do not parallel arrays on rooftop: this is done inside the inverter.

For best performance, parallelled strings should be:

- Equal number of panels
- Same orientation
- Same tilt

RED-H3-TxxHV and BExxHV Integrated Isolators

① Inverter AC Isolator 100A
② Backup AC Isolator 80A
③ PV Array DC Isolator 6P 55A @800V
④ Battery Enclosure DC Isolator 2P 55A @800V

Other devices

Record details of installer selected devices (in grey boxes provided).

Notes:

A. 2nd enclosure requires optional Connection Kit
B. This product is not warrantied for off-grid installation which is defined to be an installation at a premises that is intentionally unable to receive energy from a low voltage distribution Network.

ITEM	CHANGE DETAILS	DRAWN BY	APPROVED	DATE

SCALE NA		MATERIAL	DESCRIPTION RED-H3-TxxHV 3-PHASE HYBRID SYSTEM SINGLE LINE DRAWING INDEPENDENT INSTALLATION
DRAWN AS	DATE 01JAN2025		
CHKD TBA	DATE TBA	FINISH	DRAWING NUMBER File:RED-H3-TxxHV Single Line Diagram V1.0.des
APPD TBA	DATE TBA		PART NUMBER TBA · VERSION 0.1 · SHEET 1 OF 2 · A4

redback technologies
Building 1015, 80 Meiers Rd,
Indooroopilly, QLD 4068 Australia
1300 240 182 www.redbacktech.com

INSTALLATION DETAILS
ADDRESS

INSTALLATION DATE / / 2 0 2

INVERTER
RB

BATTERY ENCLOSURE
RB

RED-H3-TxxHV SINGLE LINE DIAGRAM - AC-COUPLED INSTALLATION

Installer: Complete and retain for your site documentation

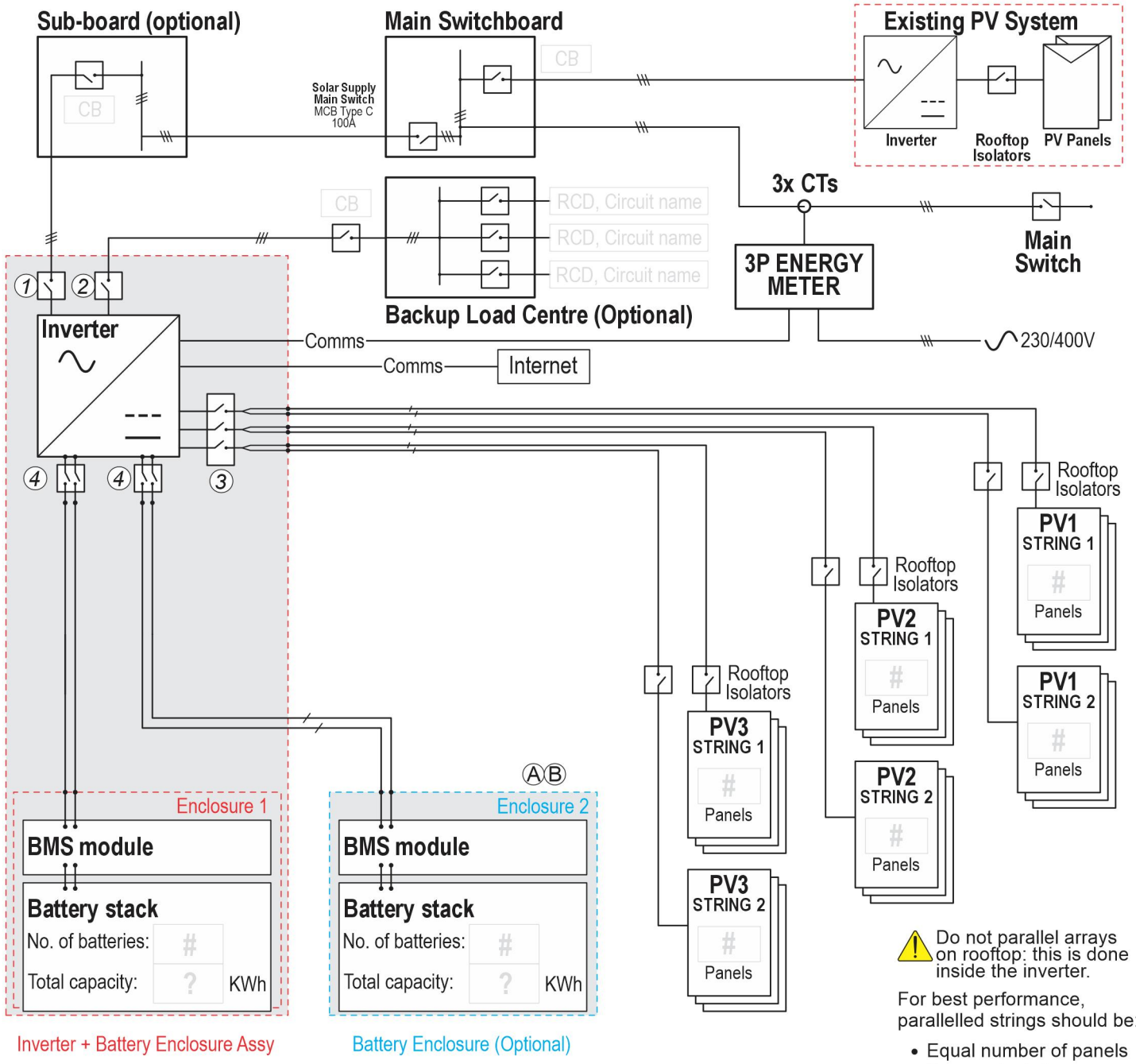

Do not parallel arrays on rooftop: this is done inside the inverter.

For best performance, parallelled strings should be:

- Equal number of panels
- Same orientation
- Same tilt

RED-H3-TxxHV and BExxHV Integrated Isolators

1. Inverter AC Isolator 100A
2. Backup AC Isolator 80A
3. PV Array DC Isolator 6P 55A @800V
4. Battery Enclosure DC Isolator 2P 55A @800V

Other devices

Record details of installer selected devices (in grey boxes provided).

Notes:

A. 2nd enclosure requires optional Connection Kit

B. This product is not warrantied for off-grid installation which is defined to be an installation at a premises that is intentionally unable to receive energy from a low voltage distribution Network.

ITEM	CHANGE DETAILS	DRAWN BY	APPROVED	DATE

SCALE NA		MATERIAL	DESCRIPTION RED-H3-TxxHV 3-PHASE HYBRID SYSTEM SINGLE LINE DRAWING AC-COUPLED INSTALLATION
DRAWN AS	DATE 24JUL2025		
CHKD TBA	DATE TBA	FINISH	DRAWING NUMBER File:RED-H3-TxxHV Single Line Diagram V1.0.des
APPD TBA	DATE TBA		PART NUMBER TBA · VERSION 1.0 · SHEET 1 OF 2 · A4

redback technologies
Building 1015, 80 Meiers Rd,
Indooroopilly, QLD 4068 Australia
1300 240 182 www.redbacktech.com